Date	October 16, 2024

NISSHINBO

Released

- Specification -

Ku-band GaN 16W BUC

Model No. NJT8336 series

RF Frequency	Local Frequency	IF Frequency
13.75 to 14.5 GHz	12.8 GHz	950 to 1,700 MHz
14 to 14.5 GHz	13.05 GHz	950 to 1,450 MHz

Rated Output Power: +42 dBm (16W)
IF Input Interface: N-type / F-type, Female Connector
Ref. (10MHz) Input: IF Connector
DC Power Input: Circular Connector / IF Connector (*)
RF Output Interface: Waveguide, WR-75 with Groove
M&C: RS-485 / Ethernet(HTTP/SNMP v2c) / Parallel I/O
Power Supply: DC Power, +36 to +54 V DC

*) Circular Connector models are available to apply DC voltage via either Circular Connector or IF Connector.

Copyright©
Nisshinbo Micro Devices Inc.
Microwave Business Division

-Notice of Proprietary Information-
This document and its contents are proprietary to Nisshinbo Micro Devices Inc.
This publication and its contents may not be reproduced or distributed for any other purpose without the written permission of Nisshinbo Micro Devices Inc.
Those specifications listed in this document are subject to change at any time.

Caution

1. While Nisshinbo Micro Devices Inc. (NISD) continually strives to improve the quality and reliability of our products, failures will occur in microwave products over time. For this reason, it is important that customers fulfill their responsibilities to ensure designed-in safety – including failsafe functions, redundancy, and measures to prevent malfunctions and the spread of fire – in order to avoid injuries, accidents, or social repercussions resulting from the failure of any products related to satellite communications on this website (hereinafter, "the product"). Customers must pay careful attention to ensuring the safety of their equipment.
2. The product is designed and tested to function in accordance with its specifications. Do not use under conditions that deviate from the product specifications included in the delivery specifications. NISD assume no responsibility and shall not be liable for any injuries, accidents, or social repercussions resulting from the product being in a poor or damaged state because it was used under conditions that depart from the specifications.
3. The product is covered by a warranty for one year following delivery unless otherwise stipulated in the contract or delivery conditions. In the event of a failure for which NISD are responsible occurring during the warranty period, NISD undertake to repair or replace the product free of charge. Note, however, that the warranty does not cover failures such as those listed here (see bullets below), even if they occur within the warranty period. In addition, in the case of a product being repaired or replaced by us, the starting date for the warranty period is still the original delivery date of the product.
   - Failure due to the product being used in conditions other than those stipulated in the data sheet, specification sheet, etc.
   - Failure due to modifications or repairs carried out by some entity other than our company
   - Failure determined to be the result of unsuitable maintenance or replacement of a consumable item that requires due maintenance
   - Failure due to circumstances that were unforeseeable given the scientific/technological standards at the time of shipment
   - Other failures due to external factors such as fire, earthquake, flood and power supply anomalies for which NISD are not responsible

   In addition, the product warranty is limited to the provision of repair services or replacement at no cost. It does not cover secondary damage (to equipment, business opportunities, profits, etc.) or any other damage that may have resulted from failure of the product.
4. The product must be handled appropriately to ensure its continued reliability. Since it can be damaged by the intrusion of water, dust, oil, chemicals, etc., it must be given appropriate protection. Even in the case of a product with an airtight construction, avoid using it in an environment that exceeds the stated levels of waterproofing/dustproofing. Also, be sure to use connectors and waveguides properly.
   If replacement parts such as fans are included, proper maintenance is necessary. To maintain product performance and functionality, it is necessary to conduct inspections and maintenance at appropriate intervals and exchange replacement parts when necessary. Improper inspections or maintenance may result in failure.
   In addition, the warranty does not cover the use of the product in areas where salt damage can be expected or where there is a substantial presence of corrosive gases such as Cl_2, H_2S, SO_2, and NO_2. If the product is to be used in such areas, at the time of installation you must take appropriate steps to protect the product.
5. If the product is to be used with equipment/systems that must meet special quality and reliability standards (aerospace equipment, medical equipment, power generation control equipment, automotive/railway transportation equipment, safety equipment, disaster prevention and security equipment, etc.), please consult with our sales staff in advance.
6. Some products contain gallium arsenide (GaAs), classified as a harmful substance. To avoid danger, do not incinerate, crush, or chemically treat the product in such a way that gases or dust are released. When disposing of the product, comply with all applicable laws and regulations and do not treat it as general industrial waste or household waste.
7. When exporting a product or technology, observe export laws and regulations such as those governing foreign exchange and foreign trade, and obtain any necessary licenses for export, service transactions, etc.
   NISD request that you do not use our products or the technical data published on this website for developing weapons of mass destruction or for any other military purposes or applications.
8. The product specifications in this document are subject to change without notice. If you are considering using a product, delivery specifications must first be settled.

∗Above Specifications are subject to change without notice.

Scope

This BUC is designed for the block up-converter intended for the satellite communication data uplink application in Ku-band. It can transmit an RF signal (Ku-band: 14.0 to 14.5 GHz or 13.75 to 14.5 GHz) output with up to 16W (+42 dBm) linear operation. It is combined a high power GaN HEMT and linearizer for higher power linear output, and a block up-converter with a phase locked local oscillator (13.05 GHz or 12.8 GHz) which is synchronized with external 10MHz reference.

The BUC receives a reference signal (10 MHz) and an IF signal (L-band: 950 to1,450 MHz or 950 to 1,700 MHz) input and transmits an RF signal (Ku-band: 14.0 to 14.5 GHz or 13.75 to 14.5 GHz) output. It is operated by +48 V DC power (Range: +36 to +54 V) input via either Circular Connector or IF Connector. The BUC can support the monitor and control functions by either Ethernet interface with both HTTP protocol of web browser and SNMP v2c protocol or RS-485 (or RS-232C option) interface with NISD original protocol.

The BUC comes in a single, weatherized housing rated for outdoor use and has either an N-Type or F-type female connector as IF input, a WR-75 waveguide flange as RF output.

Features

- Advanced GaN HEMT and Internal Linearizer Equipped
- Possible to transmit output power with up to 16W (+42 dBm) with linear operation
  - Rated Output Power(P_{Rated}): +42 dBm
  - Linear Output Power: +42 dBm typ. for -26 dBc ACPR / Spectrum Regrowth
    +41 dBm typ. for -30 dBc ACPR / Spectrum Regrowth
- Power Consumption: 110 W typ., 115 W max. @ P_{Rated}, 85W typ. @ No IF Signal
- Excellent Receive Band Rejection Filter Equipped:
  - Receive Band Noise Density: -156 dBm/Hz max. @ 10.95 to 12.75 GHz
- Output Isolator Option Available: 1.3 : 1 max. for output VSWR [Isolator Option model]
- Various M&C Interface Support: Ethernet(HTTP/SNMP v2c), RS-485, Parallel I/O, RS-232(option)
- Supporting High Operation Temperature: -40 to +75 °C for Operation guarantee
- Smaller Size & Lighter Weight: 1.8kg [3.9 lbs]

＊Above Specifications are subject to change without notice.

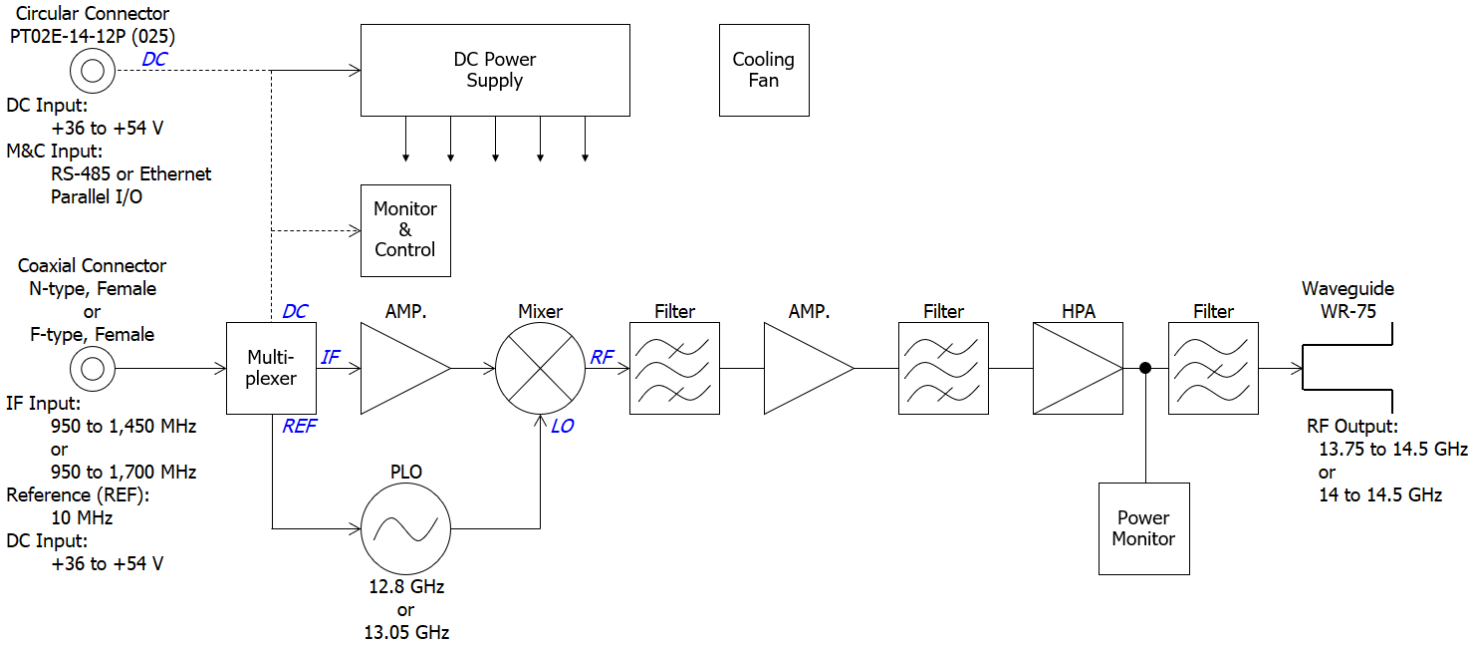

Fig.1 Functional Block Diagram

＊Above Specifications are subject to change without notice.

Series Model Number

- Numbering System

N J T 8 3 3 4 U N M T

M&C Option
- Non Suffix: N/A
- T: Ethernet(HTTP) Interface & Parallel I/O
- S: RS-485 Interface & Parallel I/O
- R: RS-232C Interface & Parallel I/O [Option]

DC Power Input Connector
- Non Suffix: IF Interface Connector
- M: Circular Connector (PT02E-14-12P (025))

IF Interface Connector
- N: N-type (50 ohms), Female Connector
- F: F-type (75 ohms), Female Connector

RF Frequency
- Non Suffix: Standard Ku-band (14.0 to 14.5 GHz)
- U: Universal Ku-band (13.75 to 14.5 GHz)

Rated Output Power
- 34: +39.0 dBm (8W)
- 36: +42.0 dBm (16W)

Ku-band BUC's Series Number

- Line-up

Model No.	RF Frequency	Local Frequency	IF Frequency	Rated Output Power	Power Input Connector	M&C Option	IF Connector
NJT8334N	14.0 to 14.5 GHz (Standard Ku-band)	13.05 GHz	950 to 1,450 MHz	8W (+39 dBm min.)	IF Interface Connector	N/A	N-type
NJT8334F							F-type
NJT8334NMT					IF Interface Connector *or* Circular Connector	Ethernet (HTTP)	N-type
NJT8334FMT							F-type
NJT8334NMS						RS-485	N-type
NJT8334FMS							F-type
NJT8334UN	13.75 to 14.5 GHz (Universal Ku-band)	12.8 GHz	950 to 1,700 MHz		IF Interface Connector	N/A	N-type
NJT8334UF							F-type
NJT8334UNMT					IF Interface Connector *or* Circular Connector	Ethernet (HTTP)	N-type
NJT8334UFMT							F-type
NJT8334UNMS						RS-485	N-type
NJT8334UFMS							F-type
NJT8336N	14.0 to 14.5 GHz (Standard Ku-band)	13.05 GHz	950 to 1,450 MHz	16W (+42 dBm min.)	IF Interface Connector	N/A	N-type
NJT8336F							F-type
NJT8336NMT					IF Interface Connector *or* Circular Connector	Ethernet (HTTP)	N-type
NJT8336FMT							F-type
NJT8336NMS						RS-485	N-type
NJT8336FMS							F-type
NJT8336UN	13.75 to 14.5 GHz (Universal Ku-band)	12.8 GHz	950 to 1,700 MHz		IF Interface Connector	N/A	N-type
NJT8336UF							F-type
NJT8336UNMT					IF Interface Connector *or* Circular Connector	Ethernet (HTTP)	N-type
NJT8336UFMT							F-type
NJT8336UNMS						RS-485	N-type
NJT8336UFMS							F-type

∗Above Specifications are subject to change without notice.

1. Electrical Specifications

#	Items	Specifications
1.1.	Output RF Frequency Range	
	<Universal Ku-band>	13.75 to 14.5 GHz
	<Standard Ku-band>	14 to 14.5 GHz
1.2.	Input IF Frequency Range	
	<Universal Ku-band>	950 to 1,700 MHz
	<Standard Ku-band>	950 to 1,450 MHz
1.3.	Maximum IF Input Level (without damage)	+13 dBm max.
1.4.	Conversion Type	Single, fixed L.O.
1.5.	L.O. Frequency	
	<Universal Ku-band>	12.8 GHz
	<Standard Ku-band>	13.05 GHz
1.6.	Frequency Sense	Positive
1.7.	Output Power	
	[Rated Output Power (P_{Rated})]	+42 dBm over temperature
	[Linear Output Power 1 ($P_{Linear-1}$)]	+42 dBm typ. at -26 dBc ACPR / Regrowth *Note1
	[Linear Output Power 2 ($P_{Linear-2}$)]	+41 dBm typ. at -30 dBc ACPR / Regrowth *Note1
1.8.	Minimum Gain at P_{rated}	62 dB
1.9.	Gain Variation over frequency at P_{rated} - 6dB @ fixed temperature	
	<Universal Ku-band>	5 dBp-p max. over 750 MHz 2 dBp-p max. over any 54 MHz
	<Standard Ku-band>	5 dBp-p max. over 500 MHz 2 dBp-p max. over any 54 MHz
1.10.	Gain Stability over temperature at P_{rated} - 6dB @ fixed frequency	5 dBp-p max. 2 dBp-p typ.
1.11.	ACPR / Regrowth Modulation Condition: Modulation: QPSK Symbol Rate: 1 Msps Data Type: PN23 FIR filter: RNYQ, α=0.2	-24 dBc max. @ +42 dBm Output Power at 1 MHz offset from modulation center frequency

*Note1: Modulation condition and offset frequency for $P_{Linear-1}$ and $P_{Linear-2}$ are same as item #1.11 ACPR / Regrowth.

∗Above Specifications are subject to change without notice.

#	Items	Specifications
1.12.	Requirement for External Reference [Frequency] [Input Power] [Phase Noise]	 10 MHz (sine-wave) -5 to +5 dBm @ Input port -125 dBc/Hz max. @ 100 Hz -130 dBc/Hz max. @ 1 kHz -140 dBc/Hz max. @ 10 kHz
1.13.	L.O. Phase Noise	-60 dBc/Hz max. @ 100 Hz -70 dBc/Hz max. @ 1 kHz -80 dBc/Hz max. @ 10 kHz -90 dBc/Hz max. @ 100 kHz -100 dBc/Hz max. @ 1MHz
1.14.	Integrated Phase Jitter (DSB)	1.5 deg. RMS between 1 kHz and 5 MHz
1.15.	Spurious at P_{Rated} [In-band] [Receive band] [Out-of-band]	 -60 dBc max. @ RF Frequency -120 dBm max. @ 10.95 to 12.75 GHz -60 dBc max. including 2nd Harmonics
1.16.	Receive Band Noise Density	-156 dBm/Hz max. @ 10.95 to 12.75 GHz
1.17.	Transmit Band Noise Density	-87 dBm/Hz max. @ RF Frequency
1.18.	Input Impedance	
	<N-type Model>	50 ohms nom
	<F-type Model>	75 ohms nom.
1.19.	Input V.S.W.R.	2 : 1 max.
1.20.	Output V.S.W.R.	2 : 1 max. 1.3 : 1 max. for Isolator Option, refer to Section 7.1
1.21.	Output Load V.S.W.R. [Recommendation] [Non Damage]	 1.3 : 1 max. 2 : 1 max.
1.22.	DC Power Requirement [Voltage Range] [Power Consumption]	 +48 VDC (+36 to +54 VDC) 110 W typ., 115 W max. @ P_{rated} 85 W typ. @ No IF signal 12 W max. @ 10 MHz reference off (Mute on)
1.23.	Mute	Shut off the HPA in case of “L.O. unlock”, “no 10 MHz reference signal”, “Over temperature”, “failure of internal power supply”, or “out of input voltage range of DC power”.

∗Above Specifications are subject to change without notice.

#	Items	Specifications
1.24.	LED Indicator	GREEN: Normal RED: Mute status RED Blinking: Fan Alarm
1.25.	Monitor and Control – The detail is mentioned in Apppendix B. Interface type: RS-485/ RS-232(Option), Ethernet(HTTP / SNMP v2c), Parallel I/O RS-485/RS-232(Option) [Functions] Monitor: Output Power Monitor, Temperature, Transmit On/Off Status, Alarm(Summary alarm, L.O. unlock, Over temperature*Note2, etc), Step Attenuator Control: Transmit On/Off, Step Attenuator, Parallel I/O Setting [Output Power Monitor] Detector Range: 15 dB (up to P_{rated}), Reading Accuracy: +/- 1.0 dB [Step Attenuator] Attenuator Range: 0 to 31.5 dB, Attenuator Step: 0.5 dB Ethernet(HTTP / SNMP v2c) [Functions] Monitor: Output Power Monitor, Temperature, Transmit On/Off Status, Alarm(Summary alarm, L.O. unlock, Over temperature*Note2, etc), Step Attenuator Control: Transmit On/Off, Step Attenuator, Parallel I/O Setting [IP address configuration] Default: Static IP (DHCP off) / Static IP address: 192.168.0.127 (Default) Subnet mask: 255.255.255.0 [Protocol] HTTP protocol (supporting Web Browse), SNMP protocol (v2c) [Output Power Monitor] Detector Range: 15 dB (up to P_{rated}), Reading Accuracy: +/- 1.0 dB [Step Attenuator] Attenuator Range: 0 to 31.5 dB, Attenuator Step: 0.5 dB Parallel I/O Summary Alarm Monitor) This Monitor is Sum of "L.O. unlock", "Over temperature"*Note2, "Fan rotation alarm", "Failure of internal power supply" and "Out of voltage of DC power input".	

Functions	Summary Alarm Monitor	Transmit On/Off Control *Note3
Interface	3V pull-up Refer to Fig.1 "Interface of Parallel I/O".	Dry contact
Logic	Normal – Close Fault – Open	Open – TX ON Close – TX OFF *Configuration ***Default*** *Note4

∗Above Specifications are subject to change without notice.

*Note2: Regardless of cooling fan status, the BUC will operate until status of over temperature which turn out at around +125 °C of internal temperature of HPA, and the Mute and Alarm will function at status of over temperature. When the internal temperature of HPA lowers to +105 °C, the BUC automatically recovers from the alarm condition.

*Note3: Disable / Enable of Transmit On/Off Control of Parallel I/O can be changed by Parallel I/O Configuration of RS-485/RS-232 (Option) or Ethernet (HTTP/SNMP v2c). The default is Enable.

*Note4: Logic (Open – TX ON; Close – TX OFF) of Transmit On/Off of Parallel I/O can be changed by Parallel I/O Configuration of RS-485/RS-232(Option) or Ethernet(HTTP/SNMP v2c).
Transmit On/Off is also controlled by RS-485/RS-232 (Option) or Ethernet (HTTP/SNMP v2c), so with a combination of Parallel I/O settings, the BUC status is as follows.

Transmit On/Off Control			BUC Status
Parallel I/O		RS-485/RS-232 / Ethernet	
Enable (Default)	ON (Default: Open)	ON(Default)	TX ON
		OFF	TX OFF
	OFF (Default: Close)	ON(Default)	TX OFF
		OFF	TX OFF
Disable	--- (not available)	ON(Default)	TX ON
		OFF	TX OFF

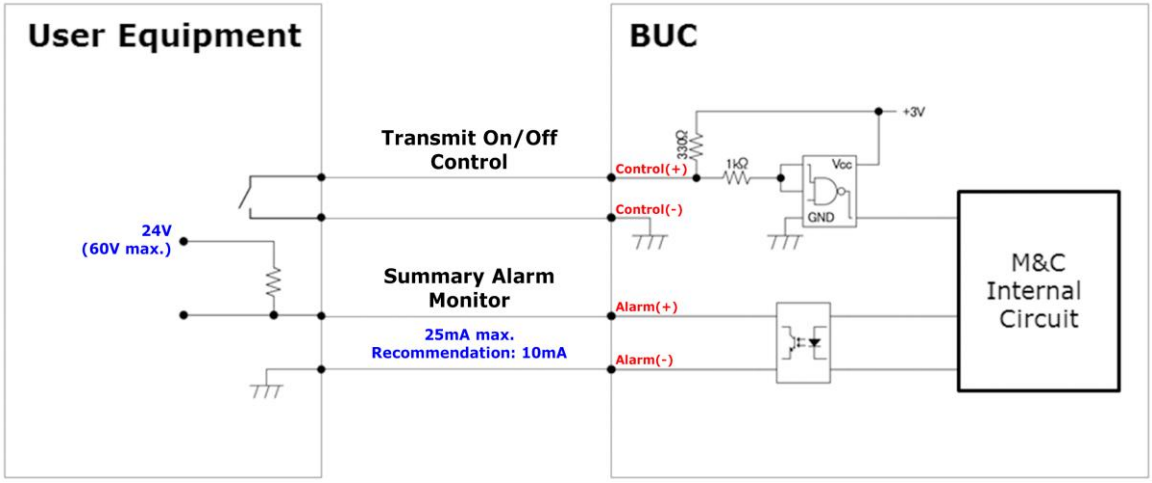

Fig. 1 Interface of Parallel I/O

*Above Specifications are subject to change without notice.

2. Mechanical Specifications

#	Items	Specifications
2.1.	Input Interface [IF Connector] [Circular Connector]	 IF / Ref. / DC Power Input: *Note5 for N-type Model Coaxial Connector , N-type Female - 50 ohms for F-type Model Coaxial Connector , F-type Female - 75 ohms DC Power Input / M&C Signal: *Note5 Model: PT02E-14-12P (025) Mating connector: PT06E-14-12S (470) Assignment: Refer to Chart 1
2.2.	Output Interface	Waveguide, WR-75 (with Groove)
2.3.	Dimension & Housing without interface connectors and screws	161 (L) × 83.8 (W) × 86.4 (H) mm [6.34" (L) x 3.30" (W) x 3.40" (H)]
2.4.	Weight	1.8 kg [4.0 lbs]
2.5.	Cooling	Forced-air-cooled *Note6

*Note5: Circular Connector models are available to apply DC voltage via either Circular Connector or IF Connector.

Caution: DO NOT apply DC voltage via both Circular Connector and IF Connector. If DC voltage is applied on both connectors, it may damage the BUC or the BUC may not operate properly.

*Note6: The cooling fan is controlled by the following internal temperatures of power supply circuit; Turned ON – +20 °C / Turned OFF – +15 °C. The status of the cooling fan can be checked by the M&C function of RS-485/RS-232 (Option) or Ethernet (HTTP/SNMP v2c).

Chart 1: Assignment

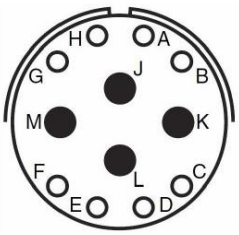

	Ethernet Option	RS-485 Option	RS-232C Option
Pin A:	Ethernet TX+	RS-485 RX+	GND COMMON (RS-232C)
Pin B:	Ethernet TX-	RS-485 RX-	N.C.
Pin C:	Alarm (+)	Alarm (+)	Alarm (+)
Pin D:	Alarm (-)	Alarm (-)	Alarm (-)
Pin E:	Control (-)	Control (-)	Control (-)
Pin F:	Control (+)	Control (+)	Control (+)
Pin G:	Ethernet RX+	RS-485 TX-	RS-232C TxD
Pin H:	Ethernet RX-	RS-485 TX+	RS-232C RxD
Pin J:	DC Power (+) / Prime *Note5	DC Power (+) / Prime *Note5	DC Power (+) / Prime *Note5
Pin K:	DC Power (-) / Return	DC Power (-) / Return	DC Power (-) / Return GND COMMON (RS-232C)
Pin L:	N.C.	N.C.	N.C.
Pin M:	N.C.	N.C.	N.C.

＊Above Specifications are subject to change without notice.

3. Environmental Specifications

#	Items	Specifications
3.1.	Temperature Range (Ambient) [Operating] [Storage]	 Operation Guarantee: -40 to +75 °C Performance Guarantee: -40 to +60 °C -40 to +75 ºC
3.2.	Humidity	0 to 100 % RH
3.3.	Altitude	15,000 feet (4,572 m)
3.4.	Vibration (Survival)	5 G [49.03 m/s^2] (3 axis, 50 Hz to 2 kHz) 1 mm p-p (3 axis, 5 to 50 Hz)
3.5.	Shock (Survival)	30 G [294.20 m/s^2] (3 axis)
3.6.	Waterproof / Dustproof (IP Code Rating)	IP 67
3.7.	Regulations	EU Directive (CE Marking) RE - 2014/53/EU EMC - 2014/30/EU RoHS - 2011/65/EU + (EU)2015/863 Safety: EN62368-1, EN60950-22
3.8.	MTBF (by Method of Parts Count Reliability Prediction)	150,000 hours and more at +35 ºC as Design Condition

∗Above Specifications are subject to change without notice.

4. Outline Drawing

4.1. N-type / IF Connector DC Input Model, IF Input Interface: N-type Female Connector / DC Power Input: IF Connector (e.g. NJT8336UN)

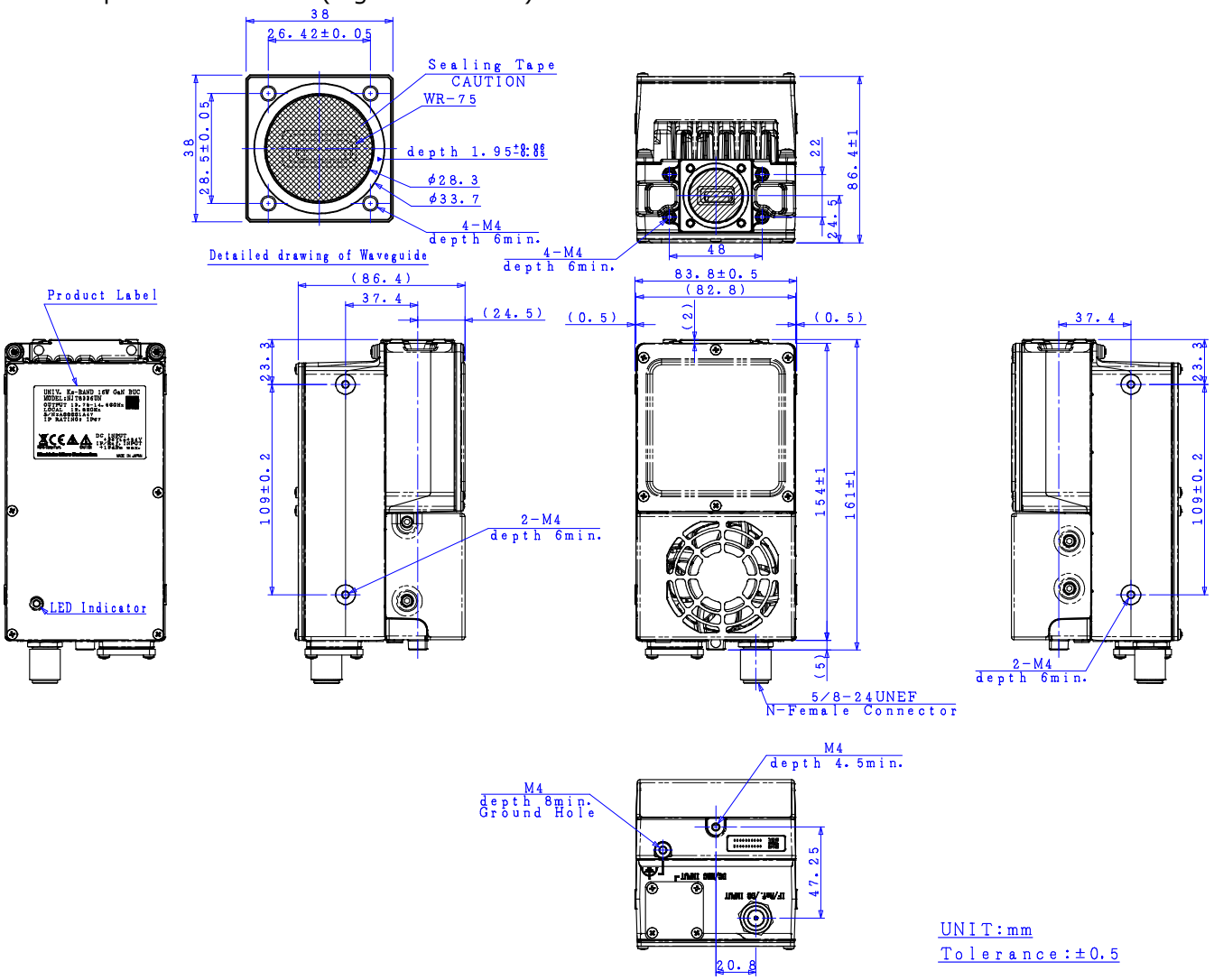

CAUTION

Items	Description
Hot Surface	Whole of body and heat sink is hot when this BUC is powered, and even after power is disconnected until it is cooled down. Do not touch hot surface to avoid a burn hazard.
RF Radiation	A radiation hazard exists if this BUC is operated with its RF signal output unterminated. Do not operate this BUC without a load or termination attached to the RF signal output.
Sealing Tape	Do not remove the sealing tape on the waveguide. If the sealing tape is removed, it will lose the performance of waterproof and also it will become out-of-warranty.
Fan Rotation	Do not insert finger into the fan in every case and time to avoid injury also do not insert any objects into the fan. Keep any objects away from the fan. Incorrect usage may cause injury to self or others.

＊Above Specifications are subject to change without notice.

4.2. N-type / Circular Connector DC Input Model, IF Input Interface: N-type Female Connector / DC Power Input: Circular Connector (e.g. NJT8336UNMT)

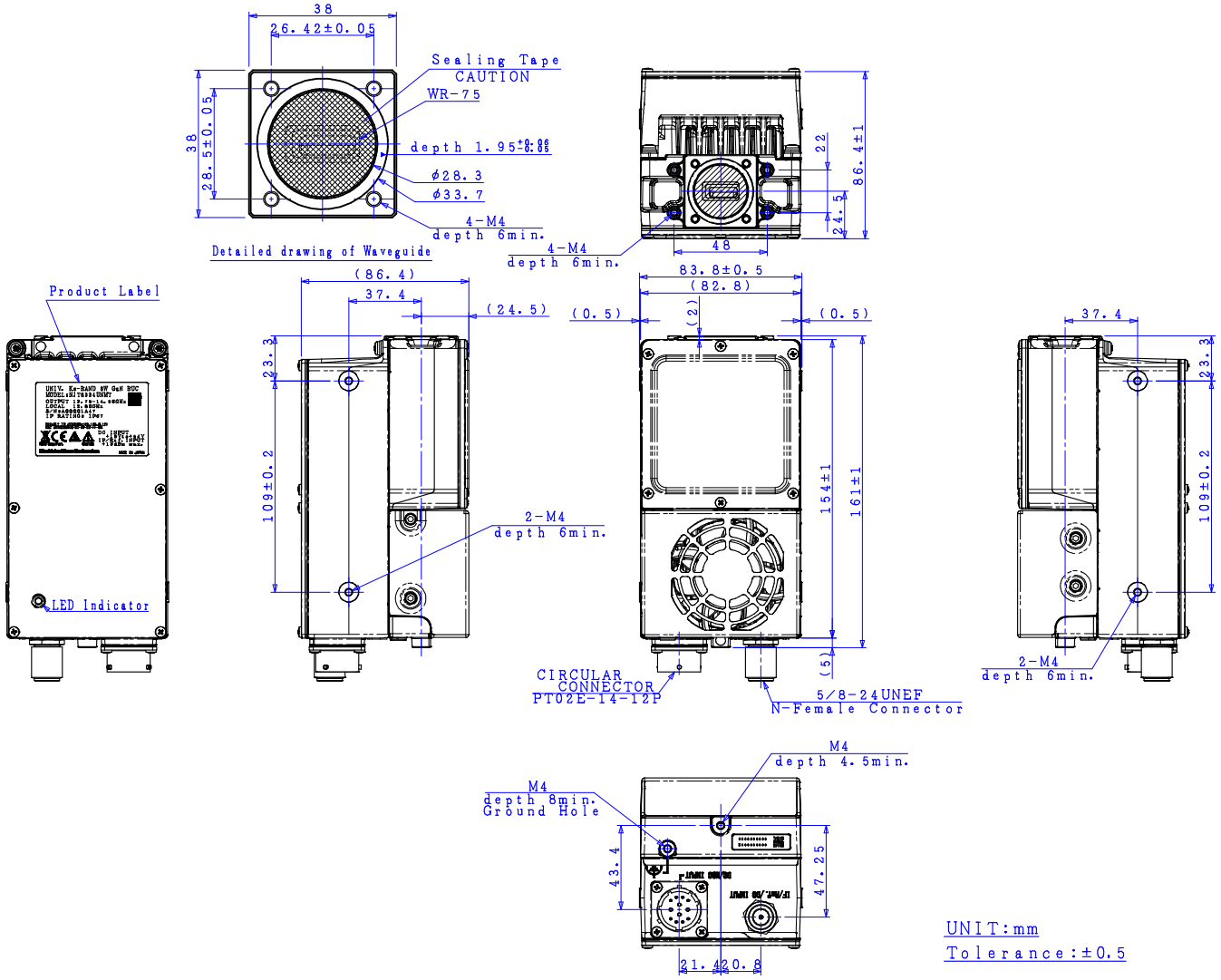

CAUTION

Items	Description
Hot Surface	Whole of body and heat sink is hot when this BUC is powered, and even after power is disconnected until it is cooled down. Do not touch hot surface to avoid a burn hazard.
RF Radiation	A radiation hazard exists if this BUC is operated with its RF signal output unterminated. Do not operate this BUC without a load or termination attached to the RF signal output.
Sealing Tape	Do not remove the sealing tape on the waveguide. If the sealing tape is removed, it will lose the performance of waterproof and also it will become out-of-warranty.
Fan Rotation	Do not insert finger into the fan in every case and time to avoid injury also do not insert any objects into the fan. Keep any objects away from the fan. Incorrect usage may cause injury to self or others.

＊Above Specifications are subject to change without notice.

4.3. F-type / IF Connector DC Input Model, IF Input Interface: F-type Female Connector / DC Power Input: IF Connector (e.g. NJT8336UF)

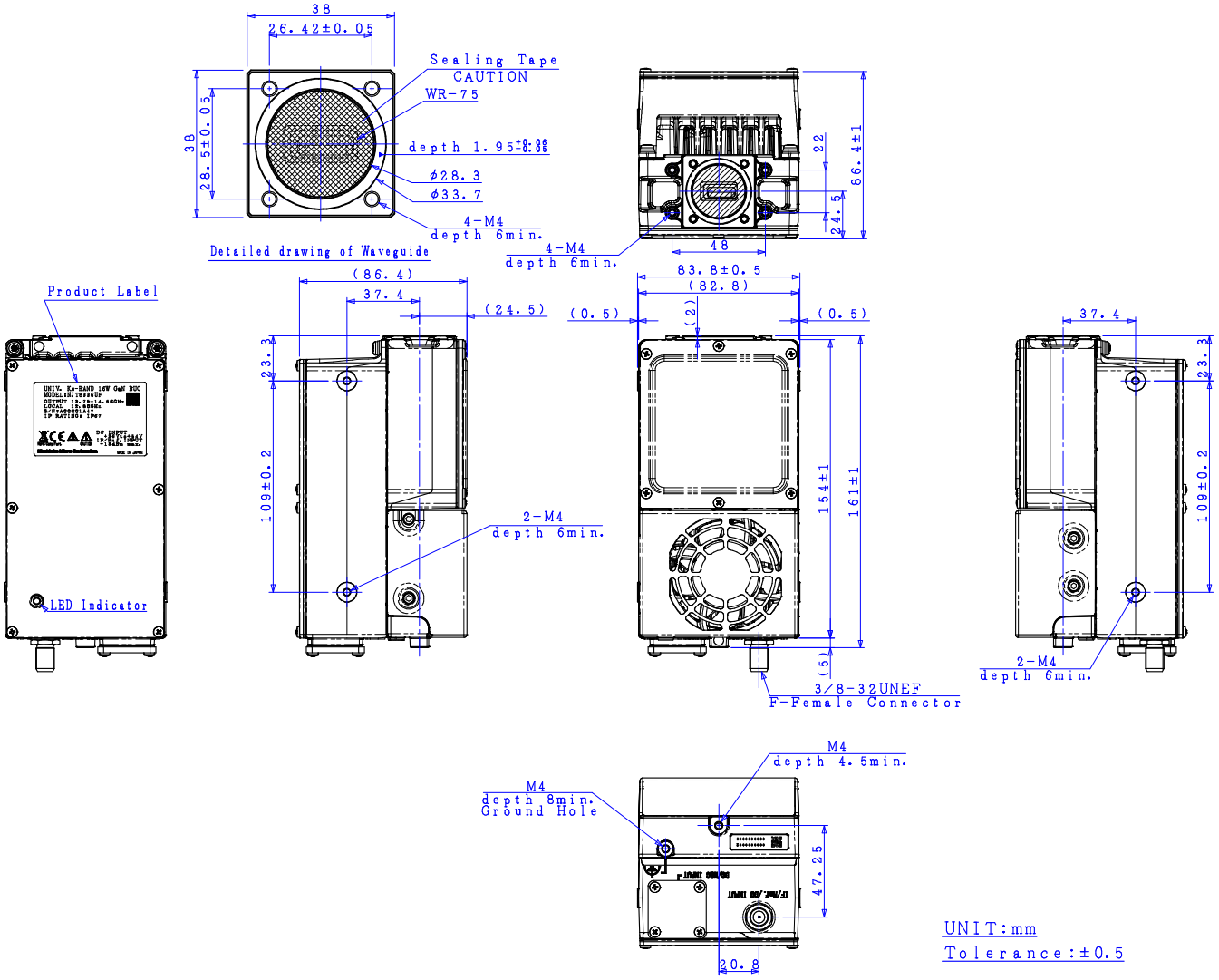

CAUTION

Items	Description
Hot Surface	Whole of body and heat sink is hot when this BUC is powered, and even after power is disconnected until it is cooled down. Do not touch hot surface to avoid a burn hazard.
RF Radiation	A radiation hazard exists if this BUC is operated with its RF signal output unterminated. Do not operate this BUC without a load or termination attached to the RF signal output.
Sealing Tape	Do not remove the sealing tape on the waveguide. If the sealing tape is removed, it will lose the performance of waterproof and also it will become out-of-warranty.
Fan Rotation	Do not insert finger into the fan in every case and time to avoid injury also do not insert any objects into the fan. Keep any objects away from the fan. Incorrect usage may cause injury to self or others.

＊Above Specifications are subject to change without notice.

4.4. F-type / Circular Connector DC Input Model, IF Input Interface: F-type Female Connector / DC Power Input: Circular Connector (e.g. NJT8336UFMT)

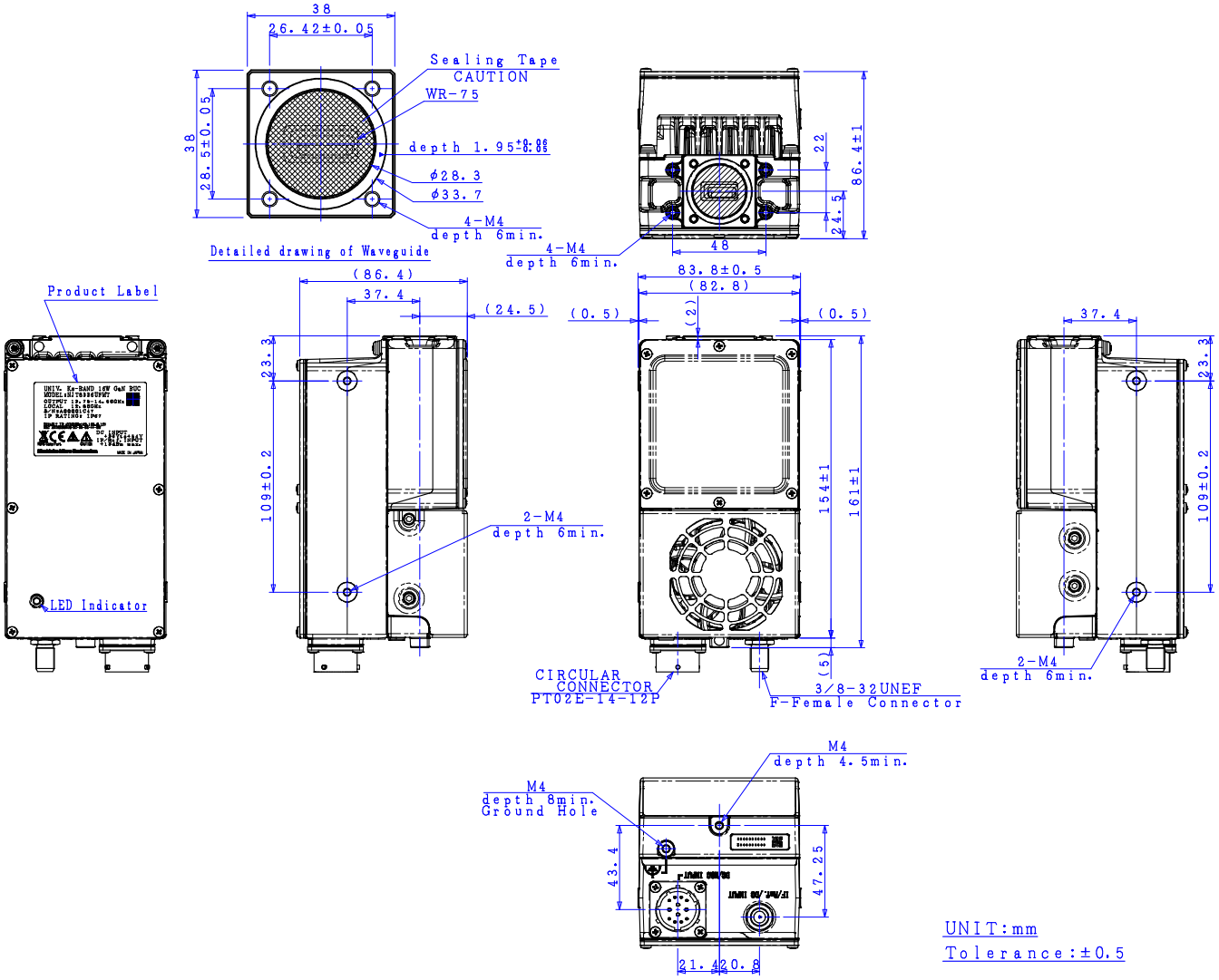

CAUTION

Items	Description
Hot Surface	Whole of body and heat sink is hot when this BUC is powered, and even after power is disconnected until it is cooled down. Do not touch hot surface to avoid a burn hazard.
RF Radiation	A radiation hazard exists if this BUC is operated with its RF signal output unterminated. Do not operate this BUC without a load or termination attached to the RF signal output.
Sealing Tape	Do not remove the sealing tape on the waveguide. If the sealing tape is removed, it will lose the performance of waterproof and also it will become out-of-warranty.
Fan Rotation	Do not insert finger into the fan in every case and time to avoid injury also do not insert any objects into the fan. Keep any objects away from the fan. Incorrect usage may cause injury to self or others.

＊Above Specifications are subject to change without notice.

5. Label

5.1. Label Outline (e.g. NJT8336UNMT)

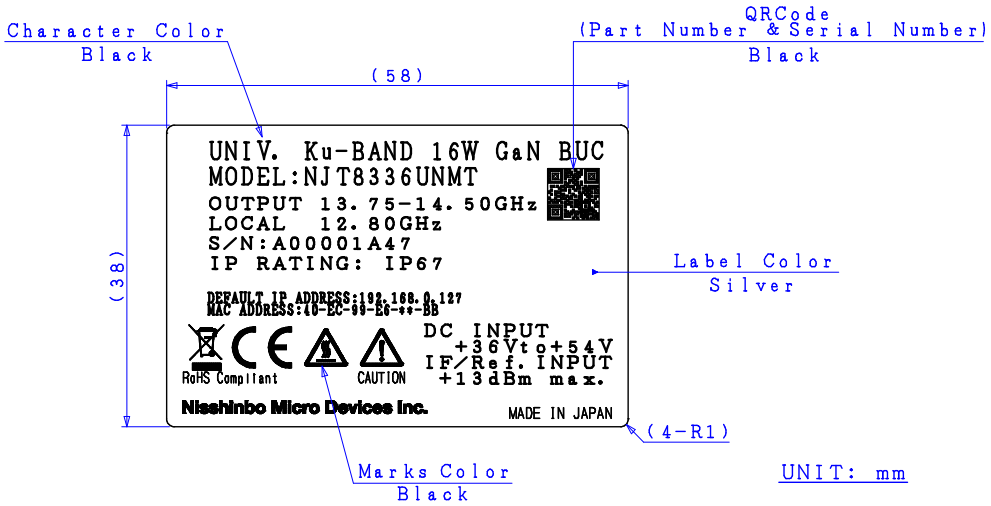

5.2. Definitions

Serial Number (OSSSSSRYM) - ALPHANUMERIC (9 characters)

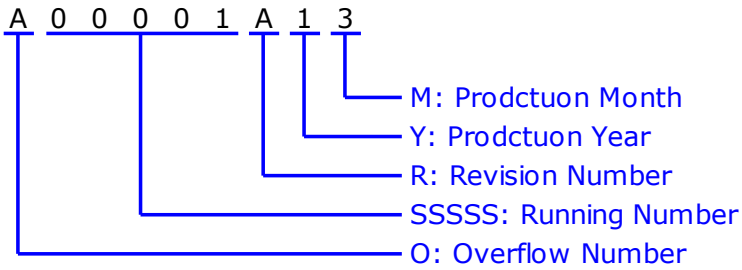

O: Overflow Number - ALPHABET (1 character)
"A" to "T" except "I" and "O", e.g.: A99999 ⇒ B00001
"V" to "Z": Specified Numbers

SSSSS: Running Number - NUMBER (5 digits)
"00001" to "99999"

R: Revision Number - ALPHABET (1 character)
"A" to "Z" except "I", "O", and "U"

Y: Prodctuon Year - NUMBER (1 digits)
"0" to "9", Last Digit of Calender Number
e.g.: 2021:"1", 2022:"2", 2023:"3"・・・・

M: Prodctuon Month - ALPHANUMERIC (9 characters)
"1" to "9", "X" as October, "Y" as November, "Z" as December

∗Above Specifications are subject to change without notice.

6. Package

6.1. Individual Package

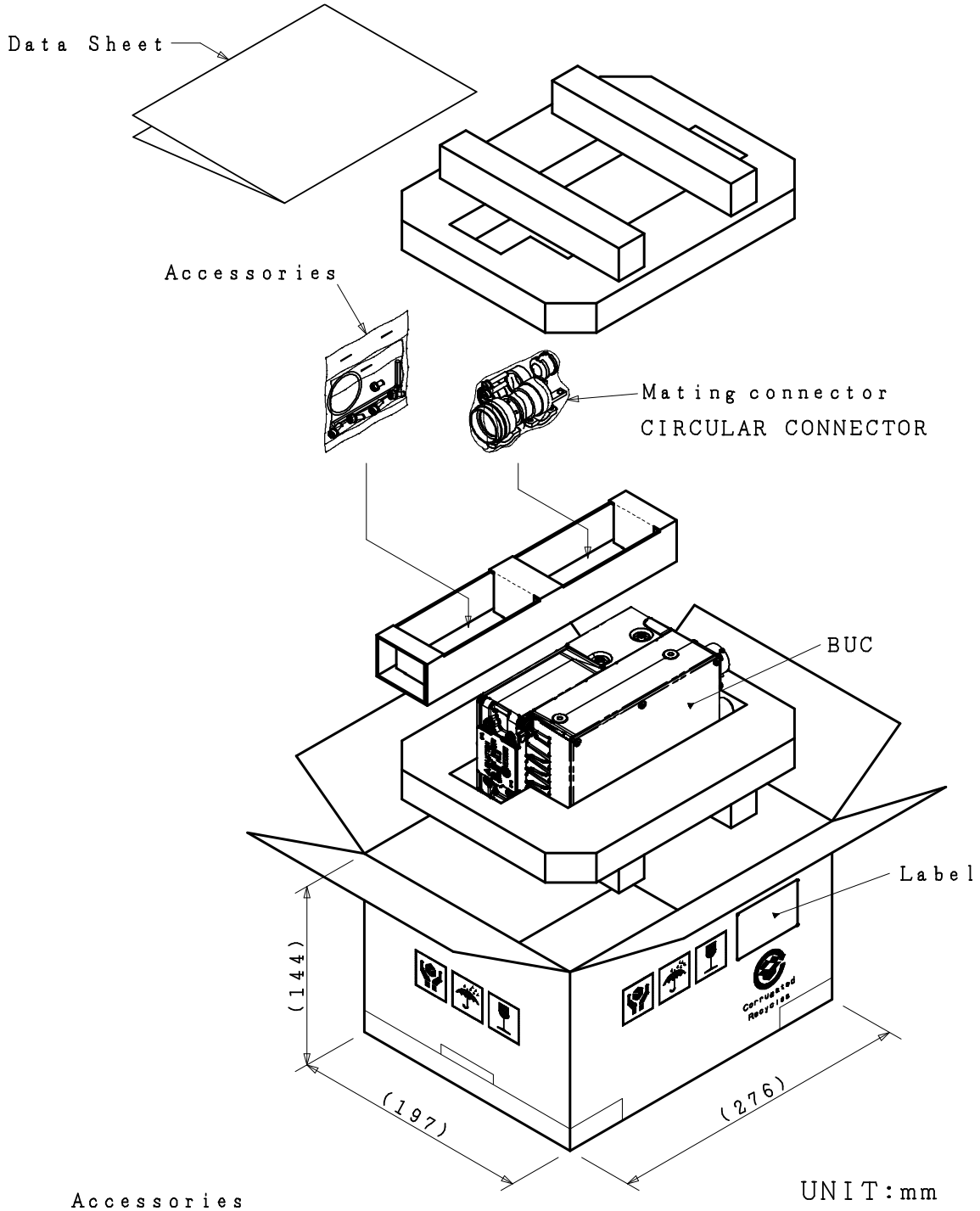

Accessories
- O-RING
- Hexagon Socket Head Bolts
  M4×10 4pieces(SUS, SW and W)
  for Waveguide Flange Holes
- Hexagon Wrench Keys(M4 Type)
- Cross Recessed Head Machine Screw
  M4×6 1 piece(SUS, SW) for Ground Hole

＊Above Specifications are subject to change without notice.

6.2. Shipping Package

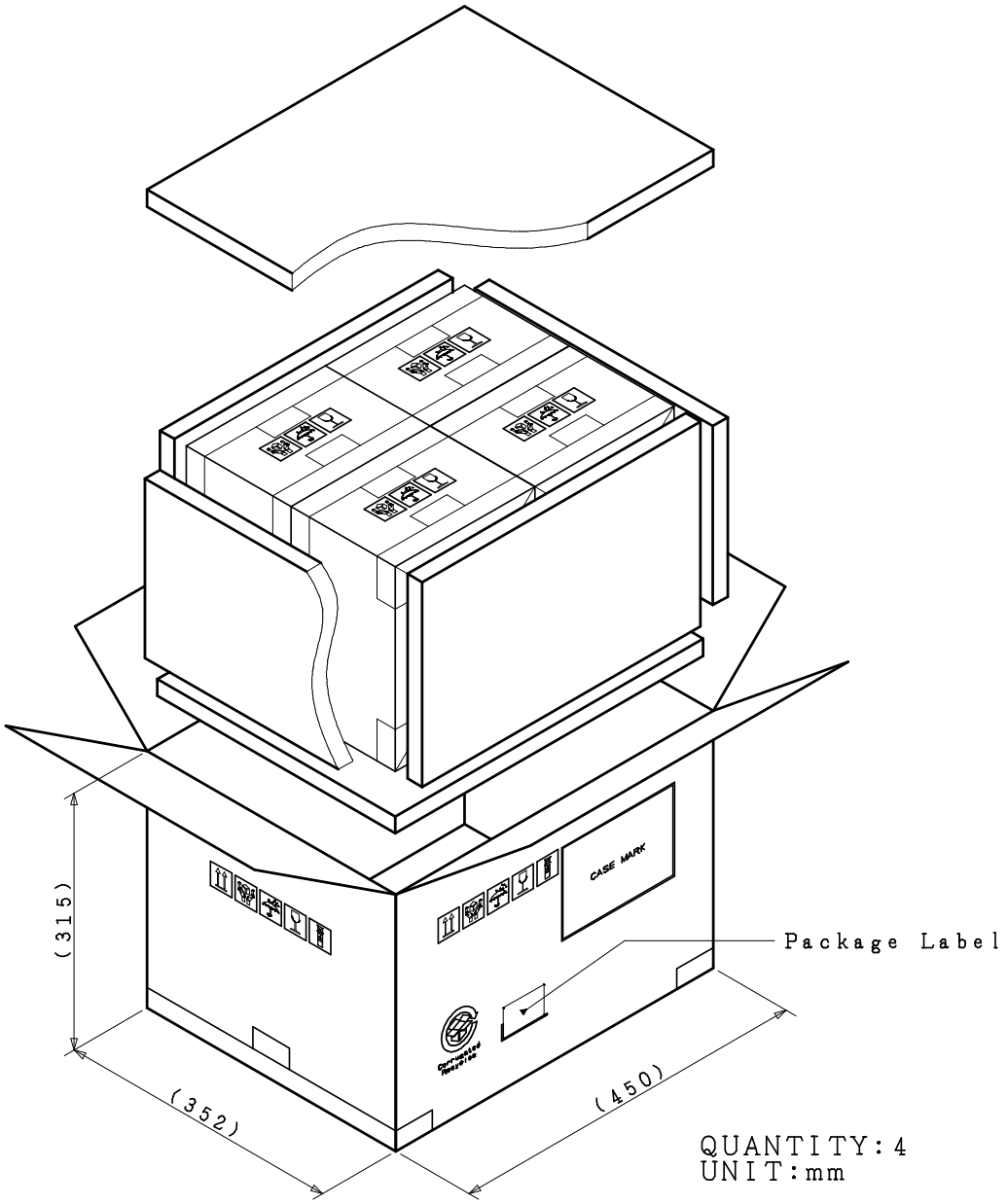

Pictorial Marking for Handling of Goods

THIS WAY UP

HANDLE WITH CARE

KEEP DRY

FRAGILE

LAYERS LIMIT:4

∗Above Specifications are subject to change without notice.

6.3. Enclosed Accessories

6.3.1. IF Connector DC Input Model

- O-ring, Qty (1), for waveguide flange
- Wrench Key, Qty (1), M4, Hexagon
- Bolts, Qty (4), M4 x 10, Hexagon socket head with spring washer and flat washer, SUS, for waveguide flange
- Screw, Qty (1), M4 x 6, Phillips head with spring washer and flat washer, SUS, for grounded hole

6.3.2. Circular Connector DC Input Model

- O-ring, Qty (1), for waveguide flange
- Wrench Key, Qty (1), M4, Hexagon
- Bolts, Qty (4), M4 x 10, Hexagon socket head with spring washer and flat washer, SUS, for waveguide flange
- Screw, Qty (1), M4 x 6, Phillips head with spring washer and flat washer, SUS, for grounded hole
- Circular Connector, Qty (1), Mating connector: PT06E-14-12S (470)

＊Above Specifications are subject to change without notice.

7. Option Parts

Items	PN	Details
WR-75 Isolator for output interface	NJZ1290W03	Section 7.1
Indoor 150W AC/DC PSU, N-type interface	NJZ1286N	Link
Indoor 150W AC/DC PSU, F-type interface	NJZ1286F	
Outdoor 250W AC/DC PSU	NJZ1289	Link
AC Power Cable, 3 m length for connecting between NJZ1289 and AC outlet	NJZ1290A01	Link
DC Power & M&C Signal Cable, 5 m length for connecting between this BUC and NJZ1289	NJZ1290A02	
Option Port Mating Connector, PT06E-12-8S(470)	NJZ1290C05	
Fan replacement kit	NJZ1290F09	---

7.1. WR-75 Isolator for output interface / PN: NJZ1290W03

This isolator is assembled to the BUC at the time of shipment.

#	Items	Specifications
7.1.1.	Frequency Range	13.75 to 14.5 GHz
7.1.2.	Insertion Loss	0.1 dB typ., 0.3 dB max.
7.1.3.	Isolation	20 dB min.
7.1.4.	VSWR	1.12 : 1 typ., 1.15 : 1 max.
7.1.5.	Forward Power	40 W
7.1.6.	Reverse Power	10 W
7.1.7.	Weight	100 g
7.1.8.	Dimensions	63.0 (L) x 17.8 (W) x 38.0 (H) mm

7.1.9. Outline Drawing

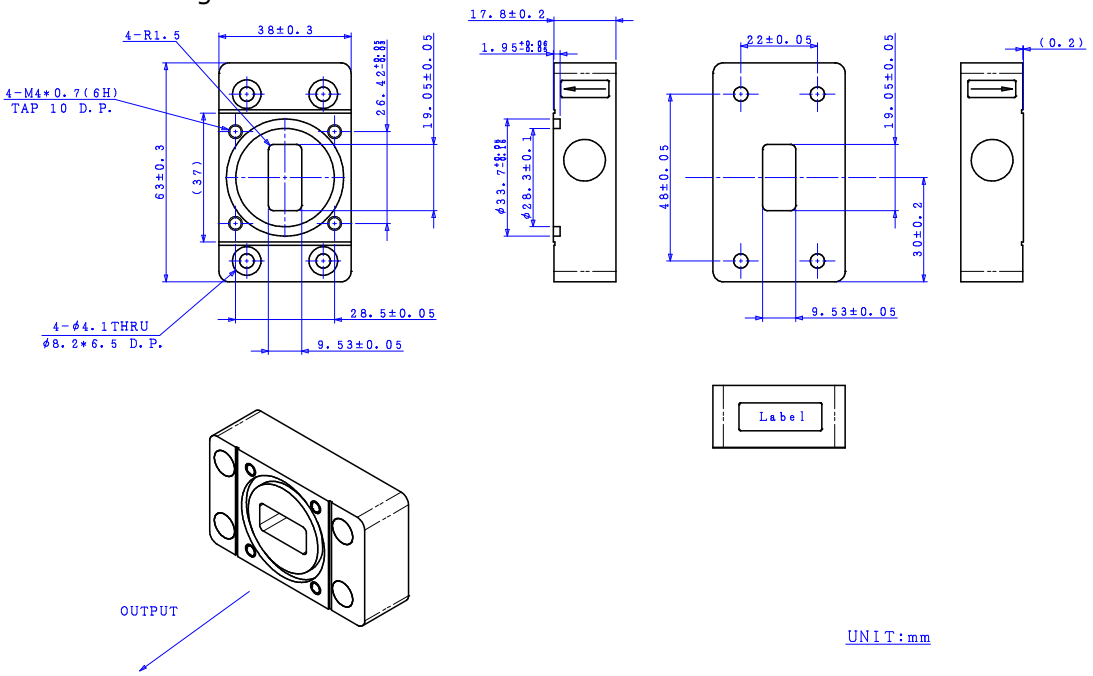

*Above Specifications are subject to change without notice.

7.1.10. Outline drawing assemled to BUC

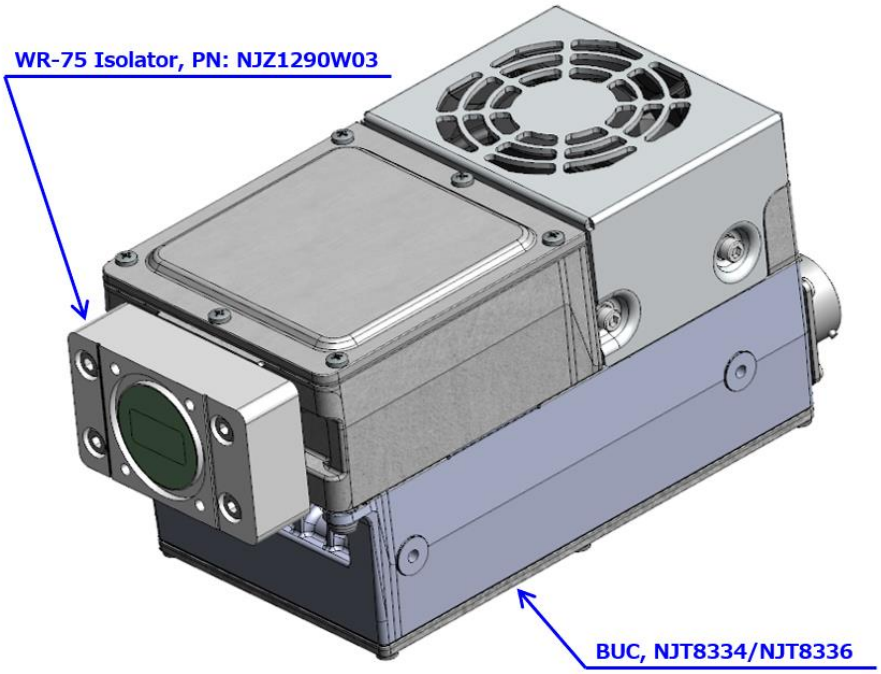

＊Above Specifications are subject to change without notice.

8. Handling Precautions

8.1. DANGER

DANGER

This statement indicates an imminently hazardous situation which, if not avoided, will result in death or serious injury.

Items	Description
Input Voltage	Only input a DC voltage within the range indicated in specifications. Do operate with the input voltage range between +36 and +54 V DC power. When applying higher voltage than specifications (+24 / +48 VDC V as maximum voltage in DC power requirement), it will not only cause this BUC failure, but it may also result in electric shock and fire.
Disassembling	Do not disassemble the BUC. Disassembling will not only cause this BUC failure, but it may also result in electric shock.

8.2. WARNING

WARNING

This statement indicates a potentially hazardous situation which, if not avoided, could result in death or serious injury.

Items	Description
RF Radiation	A radiation hazard exists if this BUC is operated with its RF signal output unterminated. Do not operate this BUC without a load or termination attached to the RF signal output.
Hot Surface	Whole of body and heat sink is hot when this BUC is powered, and even after power is disconnected until it is cooled down. Do not touch hot surface to avoid a burn hazard.

＊Above Specifications are subject to change without notice.

8.3. CAUTION

CAUTION

This statement indicates a potentially hazardous situation which, if not avoided, could result in minor or moderate injury. The statement may also be used to indicate other unsafe practices or risks of property damage.

Items	Description
Fan Rotation	Do not insert finger into the fan in every case and time to avoid injury also do not insert any objects into the fan. Keep any objects away from the fan. Incorrect usage may cause injury to self or others.
Disposal	This BUC contains gallium arsenide (GaAs), classified as a harmful substance. To avoid danger, do not incinerate, crush, or chemically treat the BUC in such a way that gases or dust are released. When disposing the BUC, comply with all applicable laws and regulations and do not treat it as general industrial waste or household waste.

8.4. NOTE

NOTE

This statement is used to notify of installation, operation, or maintenance information that is important, but not hazard-related.

Items	Description
Mounting	Do not block fins and fan of this BUC to keep the heat dispassion performance. Normally the BUC should be mounted with fan face down.
Grounding	To reduce the risk of damage or broken by lightning surge, the BUC should be grounded by connecting the ground wire.
Torque Management	Do not tighten with excessive torque when attaching screws/bolts and connectors. The following value as tighten torque is recommended. ■ Screws/Bolts - M4: 1.52 ± 0.152 N·m ■ IF Connector (N-type / F-type): 0.68 to 1.13 N·m (3.92 N·m as maximum allowable torque. When over this torque, connector may be damaged.)
Weatherproof	The BUC mounted in outdoor should be conducted with adequately weatherproof procedure. Do seal all of cable connection points from the connector to the cable sheath by usage of self-amalgamating tape. Ensure the waveguide connection is properly assembled with the enclosed o-ring gasket as accessories. The o-ring gasket is full-type and it is assumed to connect the BUC to a flat waveguide flange.

＊Above Specifications are subject to change without notice.

Items	Description
Input Voltage	Do operate with the input voltage range between +36 and +54 V DC power. Avoid applying more than the maximum voltage in this range (including ripple voltage) under any conditions.
Input IF Signal Power	Do not supply the input IF signal over the maximum level (+13 dBm), which is indicated on the product label.
Input 10MHz Signal Power	The 10 MHz reference signal should be supplied with the range between -5 and +5 dBm with sine-wave for correctly operation. Do not supply the signal level of more than +13 dBm, which is indicated on the product label.
High Temperature Operation	It may cause damage and/or degradation of reliability / lifetime to operate the BUC in a condition where the ambient temperature exceeds the maximum value, +75 °C, at operating temperature described in the specifications.
Vibration / Shock	When vibration and/or shock impact exceeding the conditions described in the specifications is applied, internal parts may be damaged.
Fan Maintenance	The fan has its lifetime. The fan is to be replaced with a new one at appropriate interval. The recommendation interval of replacement is five(5) years.
Warranty	The BUC is covered by a warranty for one(1) year following delivery unless otherwise stipulated in the contract or delivery conditions. Repairs may be possible under payment of charge even for the BUC whose warranty period has expired. Opening, removing, disassembling and modifying any parts and components (including the product label, sealing tape and screws) without fan equipment will immediately void the warranty. In any case, the BUC of invalid warranty cannot be repaired.

∗Above Specifications are subject to change without notice.

9. Instructions Manual

9.1. Descriptions

This section describes the information of connectors and etc.

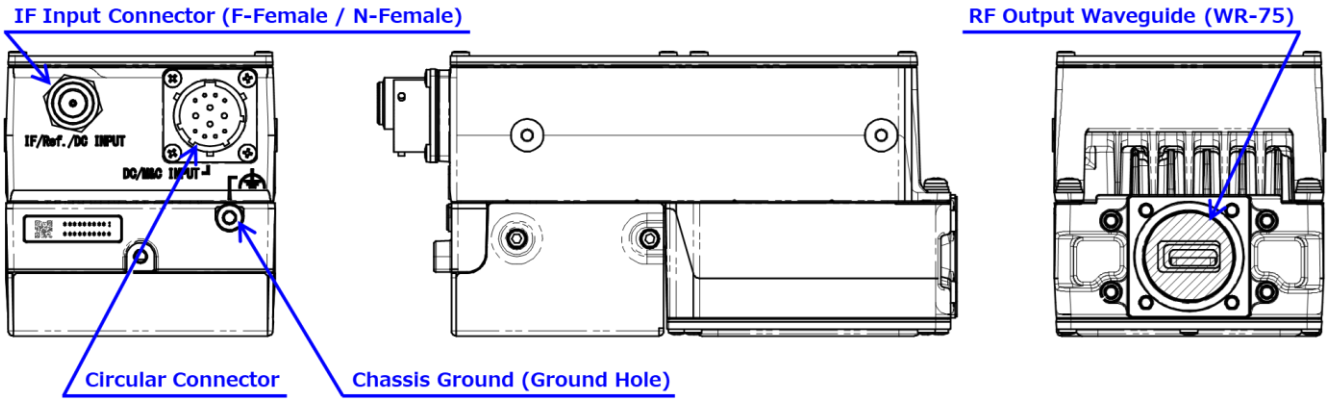

Items	Description	Purpose
IF Input Connector (F-Female / N-Female)	F-type Female Coaxial Connector, 75 Ohms OR N-type Female Coaxial Connector, 50 Ohms	The BUC is required to input an IF signal of L-band (950 to 1,450 MHz, or 950 to 1,700 MHz), and a 10 MHz reference signal via this connector. And it requires to supply +36 to +54 V of DC power input.*Note5
RF Output Waveguide (WR-75)	Waveguide: WR-75 Flange: Square Cover Grooved (Equivalent to PBR 120)	The BUC transmits an RF signal of Ku-band (13.75 to 14.5 GHz, or 14 to 14.5 GHz) output with up to 8W (+39 dBm) linear operation via this waveguide.
Circular Connector	PT02E-14-12P (025)	It requires to supply +36 to +54 V of DC power input*Note1 and to input M&C signal to meet depend on M&C option via this connector. Connector Pin Assignment: Refer to Chart 1 of Section 2. Mating connector, PT06E-14-12S (470) is enclosed as an accessory.
Chassis Ground (Ground Hole)	M4 Screw Hole	Common chassis ground / frame ground.

*Note5: Circular Connector models are available to apply DC voltage via either Circular Connector or IF Connector.

Caution: DO NOT apply DC voltage via both Circular Connector and IF Connector. If DC voltage is applied on both connectors, it may damage the BUC or the BUC may not operate properly.

＊Above Specifications are subject to change without notice.

9.2. Connection and Installation

This section describes basic installation for the BUC.

9.2.1. Mounting Configuration

The BUC can be mounted with OMT or the waveguide filter of the satellite antenna.

NOTE

✓ Do not block fins and fan of this BUC to keep the heat dispassion performance. Normally the BUC should be mounted with fan face down.

When mounting with the OMT or the waveguide filter, the following steps should be complied:

Step 1: Verify that the groove on the waveguide flange for a gasket is clean. The enclosed o-ring gasket as accessories is full-type and it is assumed to connect the BUC to a flat waveguide flange (non-grooved waveguide flange). Insert the o-ring gasket the groove as shown in the figure on the right. The o-ring gasket and flange groove dimensions is customized and optimized for this BUC; therefore any other o-ring gasket than the enclosed accessory is not permitted for using.

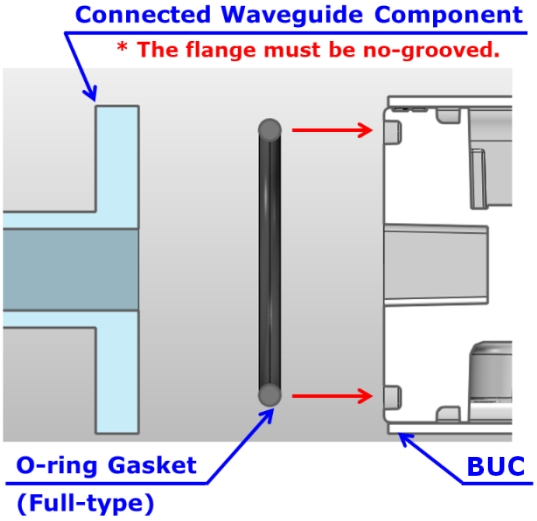

Step 2: Secure the OMT or the filter to the BUC by tightening the enclosed Phillips head screws (M4 x 10 mm) with 1.52 ± 0.152 N·m torque as shown in the figure right, when the thickness of the flange of the OMT or filter is assumed to be 3 to 5 mm. The enclosed washers as accessory must be inserted to bolts before tightening bolts.

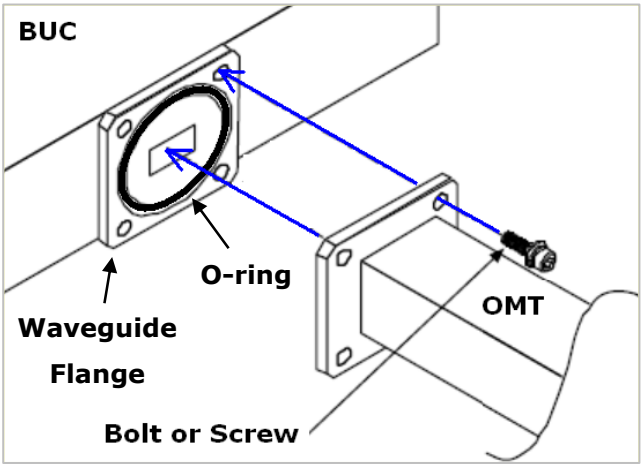

∗Above Specifications are subject to change without notice.

When the thickness is exceed 5 mm, the appropriate length screws or bolts based should be prepared on the table right.

Flange Thickness of OMT/Filter	Screw Length
3 to 5 mm	10 mm
5 to 7 mm	12 mm
7 to 9 mm	14 mm
9 to 11 mm	16 mm

NOTE

✓ The BUC must be adequately weatherproofed to place in outdoor.
Ensure that the waveguide joint is properly sealed with the enclosed o-ring gasket.

9.2.2. Connecting Coaxial Cable

The BUC is connected with the modem by a coaxial cable and requires to supply a 10 MHz reference signal from the modem. When +36 to +54 V DC power from the modem, it is supplied by here.

The connection of coaxial cable should be complied with the following steps:

Step 1: Connect the coaxial cable with the N or F-type male connectors to the coaxial connecter equipped with the BUC which is shown in the figure on the right below under 0.68 to 1.13 N·m tighten torque.

Step 2: Use self-amalgamating tape to seal connector and cable entry points from the connector to the cable sheath.

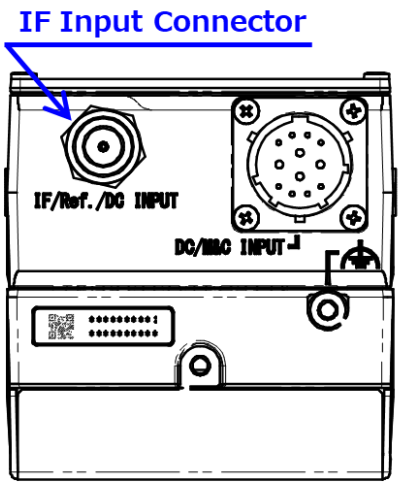

Do not power on the modem before finishing all of steps of Connecting Coaxial Cable.

NOTE

✓ The BUC must be adequately weatherproofed to place in outdoor.
Do seal all of cable connection points from the connector to the cable sheath by usage of self-amalgamating tape.

9.2.3. Connecting Ground Wire for Chassis Ground

The BUC can be had the chassis ground of the other equipment (e.g. modem) in common.

Connecting wire for common chassis ground from the chassis ground of the other equipment should be complied with the following step:

Tools Required: #2 Phillips screwdriver

＊Above Specifications are subject to change without notice.

Step: Connect the ground wire from earth ground or chassis ground of other equipment to the chassis ground with M4 x 6 mm Philips pan head screw under 1.52 ± 0.152 N·m tighten torque.

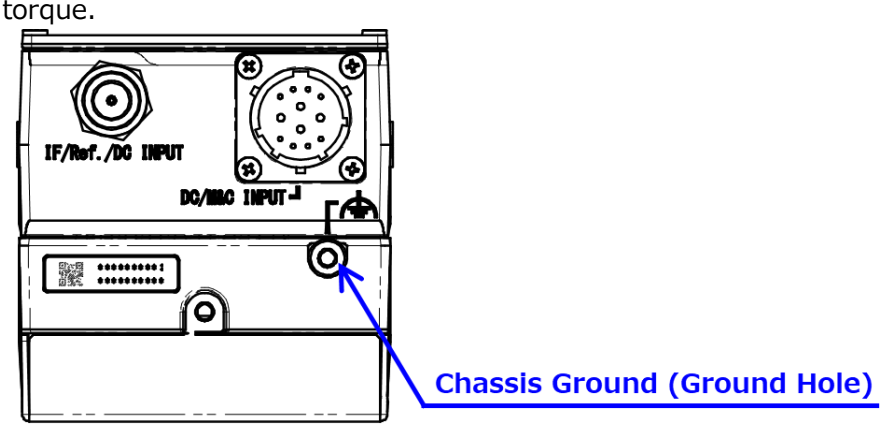

NOTE

✓ To reduce the risk of damage or broken by lightning surge, the BUC should be grounded by connecting the ground wire.

9.2.4. Connecting Circular Connector Cable

The BUC is connected to the other equipment by a circular connector cable to supply +36 to +54 V DC power and to communicate M&C

Connect wires referring to the following pin/wire assignments. Refer to Appendix A for cable assembly.

Pin/Wire Assignment

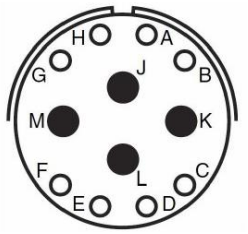

	Ethernet Option	RS-485 Option	RS-232C Option
Pin A:	Ethernet TX+	RS-485 RX+	GND COMMON (RS-232C)
Pin B:	Ethernet TX-	RS-485 RX-	N.C.
Pin C:	Alarm (+)	Alarm (+)	Alarm (+)
Pin D:	Alarm (-)	Alarm (-)	Alarm (-)
Pin E:	Control (-)	Control (-)	Control (-)
Pin F:	Control (+)	Control (+)	Control (+)
Pin G:	Ethernet RX+	RS-485 TX-	RS-232C TxD
Pin H:	Ethernet RX-	RS-485 TX+	RS-232C RxD
Pin J:	DC Power (+) / Prime	DC Power (+) / Prime	DC Power (+) / Prime
Pin K:	DC Power (-) / Return	DC Power (-) / Return	DC Power (-) / Return
Pin L:	N.C.	N.C.	N.C.
Pin M:	N.C.	N.C.	N.C.

Do not power on the DC power supply before finishing to connect Circular Connector Cable.

Refer to Apppendix B for the detail of Monitor and Control.

＊Above Specifications are subject to change without notice.

Ethernet Option)

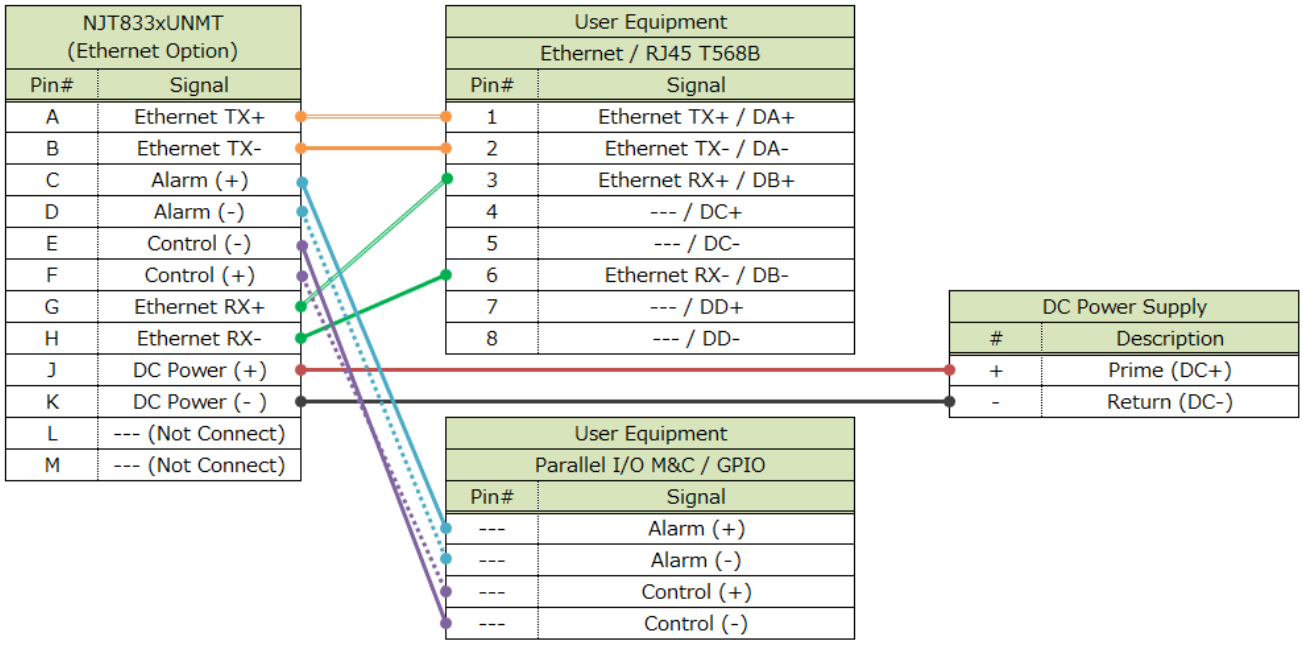

RS-485 Option)

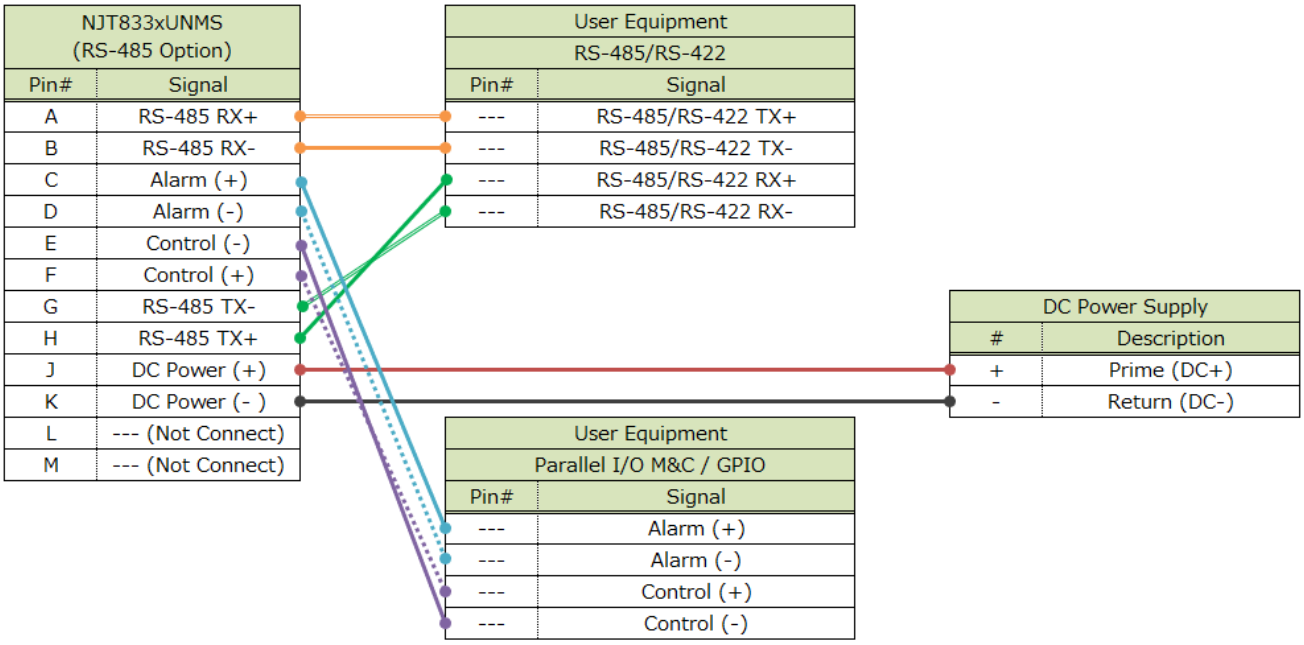

∗Above Specifications are subject to change without notice.

RS-232C Option)

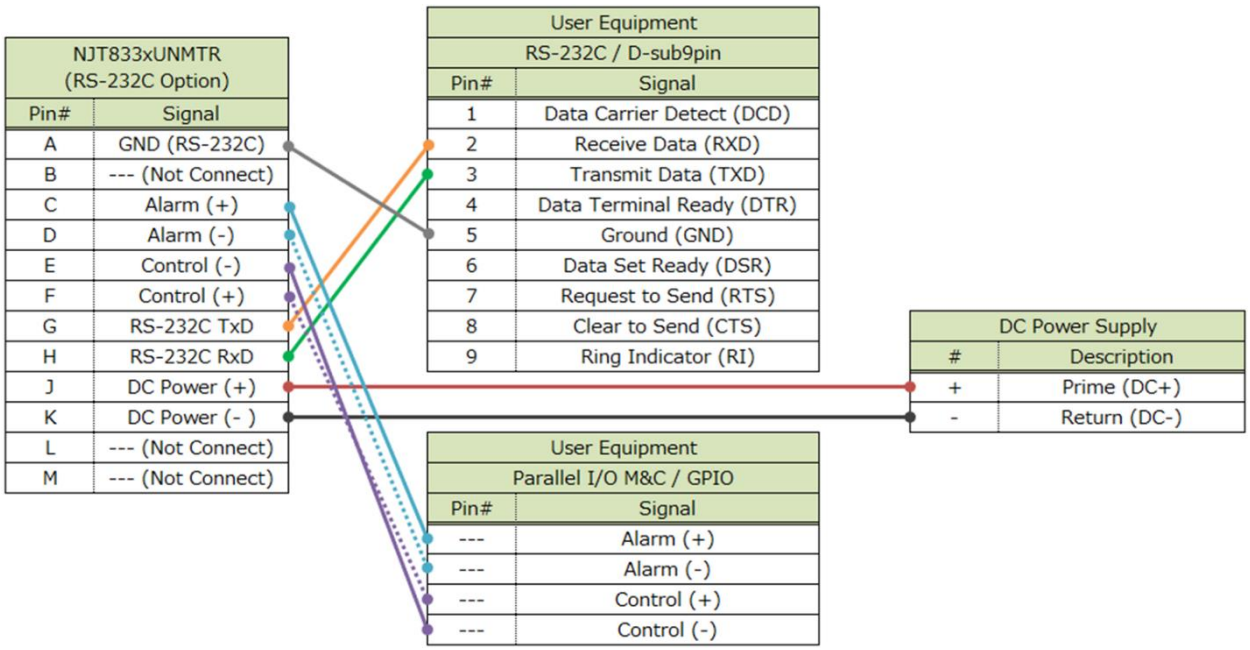

9.2.5. Start-up

Start-up will be immediately performed with the following step:

Step: Power on the modem, supply the DC voltage form the modem via coaxial connector or from the other DC power supply via circular connector, and supply 10 MHz reference from modem.

DANGER

✓ Only input a DC voltage within the range indicated in specifications.
Do operate with the input voltage range between +36 and +54 V DC power.
When applying higher voltage than specifications (+54 V as maximum voltage in DC power requirement), it will not only cause this BUC failure, but it may also result in electric shock and fire.

NOTE

✓ The 10 MHz reference signal should be supplied with the range between -5 and +5 dBm with sine-wave for correctly operation.
Do not supply the signal level of more than +13 dBm.

✓ Do not power on the modem before finishing all of steps of Connection and Installation.

＊Above Specifications are subject to change without notice.

Appendix A)

Cable Assembly of Mating Connector for PT Series Connector

Contents

1. Amphenol PT Series Connector

1. Amphenol PT Series Connector

Applicable Connector:

- PT06E-14-12S(470)

Assembly Procedure Steps:

Step 1: Prepare a signal cable with the wanted length. Use the cable with core wire conductor size and an outer diameter (O.D.) in below.

	PT06E-14-12S(470)
Layout / Pin Assignment (Mating face view of pin inserts) Contact Type: ○ = #20 ● = #16	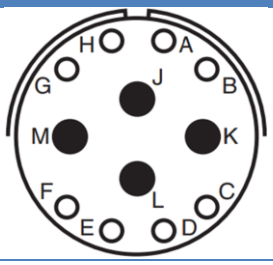
Shell Size	Shell-14
Contact Number	8 contacts - #20 4 contacts - #16
Outer Diameter	14 mm max.

Contact Type	#20
Wire Size	AWG #20 to #22
Wire Stripping Length	3.7 to 4.2 mm

Table 1 Description of Connector / Cable / Wire

Step 2: Strip the outer sheath and filler with up to 50 mm and strip the wire insulations with Wire Stripping Length by wire-stripper in Table 1. Treat the stripped wires with Rosin-flux of within-expired-date and immediately pre-solder the stripped wires with Rosin core solder.

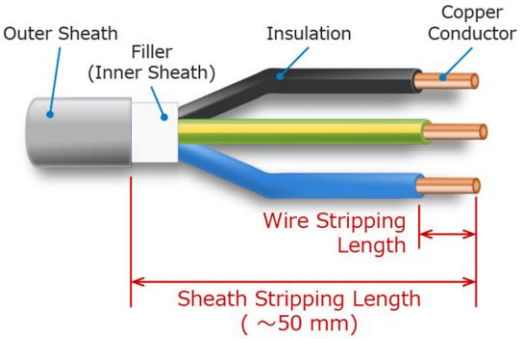

NOTE

✓ Notice that any damage of the wire insulations when stripping the outer sheath and filler shall be avoided.

∗Above Specifications are subject to change without notice.

Step 3: Disassembly a cable clamp, endbell, compression ring, and grommet from the connector body. Insert the cable clamp, endbell, and compression ring to the prepared signal cable in the order of the cable clamp, endbell, compression ring.
Insert wires to the grommet under condition matched the pin assignment of contacts and wires.

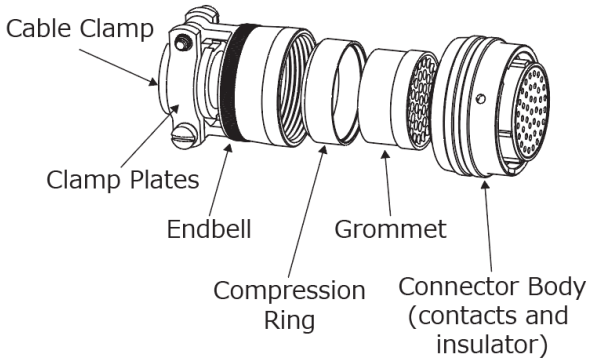

Step 4: Solder all of contacts and wires under condition with the pin assignment. It is recommended to arrange so that the contact cuts are upward for easy-soldering.
Cleanse the flux at soldering points with ethyl-alcohol and etc.

NOTE

✓ Notice that insulator of the connector body shall be avoided to deform.

Step 5: Slide the grommet to the connector body until it hits the back of the insulator, and insert the compression ring to the step edge of the grommet.
Tighten the endbell to the connector body with following torque met for shell size.

Shell Size	Tighten Torque	Connector P/N
Shell-14	4.6 to 5.1 N·m	PT06E-14-12S(470)

When a gap between the cable clamp and wires is 1 mm or more, wrap wires at the cable clamp point with a self-amalgamating tape so that the gap is 1 mm or less. Set the cable clamp at wires of the cable clamp point. And clamp the cable clamp with two clamp plates, which will be fixed with enclosed flat head screws to the endbell.
Wrap both the cable and connector with a self-amalgamating tape from outer sheath of cable to the middle of endbell like as shown in the range of arrows in following image.

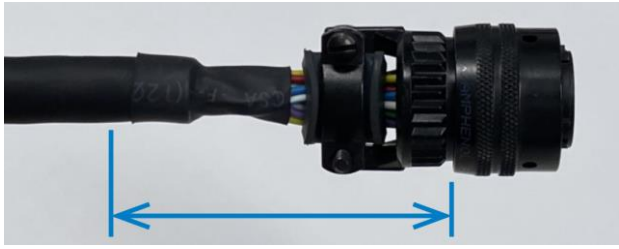

∗Above Specifications are subject to change without notice.

Rev. 1.0
Issued on October 1, 2024

Appendix B)

Specifications of Monitor & Control (M&C) for Ku-band GaN 8W/16W BUC

Contents

2. Parallel I/O M&C
3. Serial(RS-485 / RS232C) M&C
4. Ethernet M&C

＊Above Specifications are subject to change without notice.

1. Parallel I/O M&C

1.1. M&C Items

Transmit On/Off Control
Summary Alarm Monitor

1.2. Structure

Dry Contact / 3V Pull-up with 330 ohms resister
Details are mentioned on the following diagram.

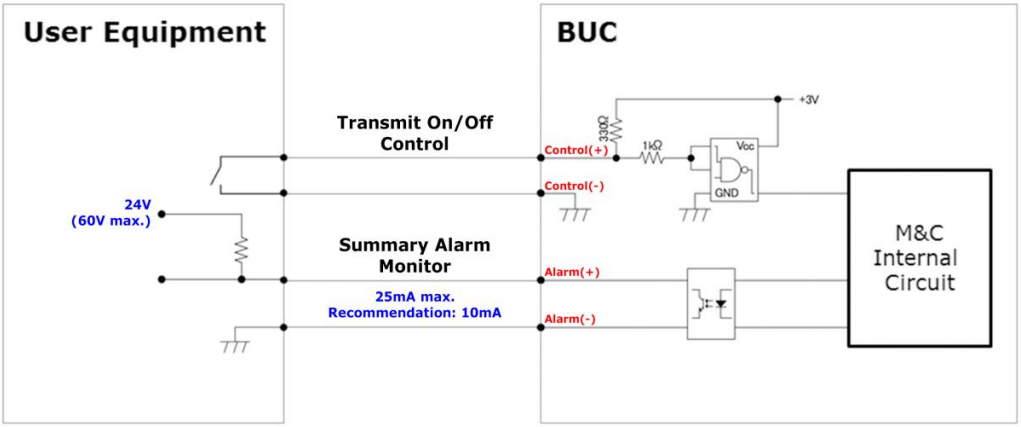

1.3. Status

Transmit On/Off Control;

Open – TX ON (Default)

Close – TX OFF (Default)

- Close/Open polarity can be changed by RS-485 and Ethernet M&C.
- Parallel I/O of Transmit On/Off Control can be set to Disable/Enable by RS-485 and Ethernet M&C.

Summary Alarm Monitor;

Normal – Close

Fault – Open

- This Alarm Monitor is Sum of "L.O. unlock", "Over temperature"*Note2, "Fan rotation alarm", "Failure of internal power supply circuit" and "Out of voltage of DC power input".

＊Above Specifications are subject to change without notice.

2. Serial(RS-485 / RS232C) M&C

2.1. Physical Interface

2.1.1. RS-485(EIA-485)

(1) Structure

a. Duplex — Full-duplex, two signal pairs (four wires)

(2) Transmitter Outputs

a. Output Voltage Swing — 0 V min. / +3.3 V max.

b. Output Resistance — 10 MΩ typ.

(3) Receiver Inputs

a. Input Voltage Range — 0 V min. / +3.3 V max.

b. Input Threshold low — +0.8 V max.

c. Input Threshold High — +2 V min.

d. Input Resistance — 96 kΩ min.

2.1.2. RS-232C

(1) Structure

a. Duplex — Full-duplex, one signal pair (two wires)

(2) Transmitter Outputs

a. Output Voltage Swing — ±5 V min. / ±5.4 V typ.

b. Output Resistance — 300 Ω min. / 10 MΩ typ.

(3) Receiver Inputs

a. Input Voltage Range — ±15 V

b. Input Threshold low — +0.6 V min.

c. Input Threshold High — +2.4 V max.

d. Input Resistance — 7 kΩ max.

2.2. Transmission Protocol

a. Operation Mode — Binary

b. Transfer Rate — 115200 bit/s for RS-485
9600 bit/s for RS-232C

c. Data Format — 1 start bit, 8 data bits, 1 stop bit, No Parity

ST	D0	D1	D2	D4	D5	D6	D7	SP

Transmit →

(The least significant bit (LSB) is sent first.)

ST: Start bit
D0: Data (LSB)

D7: Data (MSB)
SP: Stop bit

d. Maximum Response Time — 50 ms

e. Massage Rate — 1 every 20 ms

＊Above Specifications are subject to change without notice.

2.3. Packet Format

a. Data Packet Length 7 Bytes

b. Byte Configuration

Byte	Command (IDU to BUC)	Response (BUC to IDU)
1st	BUC Address*1	BUC Address*2
2nd	Command	Data Byte 1
3rd	Data Byte 1	Data Byte 2
4th	Data Byte 2	Data Byte 3
5th	Data Byte 3	Data Byte 4
6th	Data Byte 4	Data Byte 5
7th	Checksum*3	Checksum*3

*1: Default setting of a BUC address is 0x01.

*2: Response address is shifted left by 4 bits.

*3: Algebraic sum of bytes 1 through 6.

Note: Spare bytes are always filled with 0xAA (10101010).

2.4. Command Message Structure (USER EQUIPMENT to BUC)

The BUC status is stored to internal EEPROM. The last BUC state is stored to internal EEPROM, so when the BUC is re-turned DC power on again, the state of configuration is restarted with last BUC condition.

2.4.1. Command Message List (USER EQUIPMENT to BUC)

Command Items	2nd Byte Value	Response
Request Summary Status (Section 2.4.2.a)	0x01	Section 2.5.a
Request Alarm Status (Section 2.4.2.b)	0x0C	Section 2.5.b
Set Transmit On/Off Control (Section 2.4.2.c)	0x02	Section 2.5.c
Set BUC Address (Section 2.4.2.d)	0x03	Section 2.5.d
Get BUC Address (Section 2.4.2.e)	0xFF	Section 2.5.e
Set Step Attenuator Value (Section 2.4.2.f)	0x05	Section 2.5.f
Get Step Attenuator Value (Section 2.4.2.g)	0x06	Section 2.5.g
Get Fan Status (Section 2.4.2.h)	0x08	Section 2.5.h
Get Voltage Status (Section 2.4.2.i)	0x09	Section 2.5.i
Get Temperature Status (Section 2.4.2.j)	0x0A	Section 2.5.j
Get Output Power Monitor (Section 2.4.2.k)	0x0B	Section 2.5.k
Set Parallel I/O Configuration (Section 2.4.2.l)	0x14	Section 2.5.l
Get Parallel I/O Configuration (Section 2.4.2.m)	0x13	Section 2.5.m

2.4.2. Command Message Structure (USER EQUIPMENT to BUC)

a. Request Summary Status (Command) / Response is in Section 2.5.a / [Command List]

This command can acquire output power monitor, alarm status, transmit On/Off control status, BUC class, and temperature etc.

Byte	Name	Description	Value
1st	Address	BUC address (Default: 0x01)	0x01 to 0x0F
2nd	Command	Request Summary Status	0x01
3rd	Data Byte 1	Not used	0xAA (Fixed)
4th	Data Byte 2	Not used	0xAA (Fixed)
5th	Data Byte 3	Not used	0xAA (Fixed)
6th	Data Byte 4	Not used	0xAA (Fixed)
7th	Checksum	Algebraic sum of bytes 1 - 6	

e.g.)

01	01	AA	AA	AA	AA	CHK

b. Request Alarm Status (Command) / Response is in Section 2.5.b / [Command List]

This command can check status of all alarm function.

Byte	Name	Description	Value
1st	Address	BUC address (Default: 0x01)	0x01 to 0x0F
2nd	Command	Request Alarm Status	0x0C
3rd	Data Byte 1	Not used	0xAA (Fixed)
4th	Data Byte 2	Not used	0xAA (Fixed)
5th	Data Byte 3	Not used	0xAA (Fixed)
6th	Data Byte 4	Not used	0xAA (Fixed)
7th	Checksum	Algebraic sum of bytes 1 - 6	

e.g.)

01	0C	AA	AA	AA	AA	CHK

c. Set Transmit On/Off Control (Command) / Response is in Section 2.5.c / [Command List]

This command can set a control of transmit on and transmit off.

Byte	Name	Description	Value
1st	Address	BUC address (Default: 0x01)	0x01 to 0x0F
2nd	Command	Set Transmit On/Off State	0x02
3rd	Data Byte 1	Transmit On/Off	0x00: TX OFF 0x01: TX ON
4th	Data Byte 2	Not used	0xAA (Fixed)
5th	Data Byte 3	Not used	0xAA (Fixed)
6th	Data Byte 4	Not used	0xAA (Fixed)
7th	Checksum	Algebraic sum of bytes 1 - 6	

e.g.)

01	02	01	AA	AA	AA	CHK

∗Above Specifications are subject to change without notice.

d. Set BUC Address (Command) / Response is in Section 2.5.d / [Command List]

This command can set the BUC address.

Byte	Name	Description	Value
1st	Address	BUC address (Default: 0x01)	0x01 to 0x0F
2nd	Command	Set BUC Address	0x03
3rd	Data Byte 1	New address	0x01 to 0x0F
4th	Data Byte 2	Not used	0xAA (Fixed)
5th	Data Byte 3	Not used	0xAA (Fixed)
6th	Data Byte 4	Not used	0xAA (Fixed)
7th	Checksum	Algebraic sum of bytes 1 - 6	

e.g.)

01	03	0F	AA	AA	AA	CHK

e. Get BUC Address (Command) / Response is in Section 2.5.e / [Command List]

This command can search the BUC address which the system is connecting BUC.

Byte	Name	Description	Value
1st	Dummy Byte	Not used	0xAA (Fixed)
2nd	Command	Get BUC Address	0xFF
3rd	Data Byte 1	Not used	0xAA (Fixed)
4th	Data Byte 2	Not used	0xAA (Fixed)
5th	Data Byte 3	Not used	0xAA (Fixed)
6th	Data Byte 4	Not used	0xAA (Fixed)
7th	Checksum	Algebraic sum of bytes 1 - 6	

e.g.)

AA	FF	FF	AA	AA	AA	CHK

f. Set Step Attenuator Value (Command) / Response is in Section 2.5.f / [Command List]

This command can set the step attenuator with 0.5 dB step.

Byte	Name	Description	Value
1st	Address	BUC address (Default: 0x01)	0x01 to 0x0F
2nd	Command	Set Step Attenuator Value	0x05
3rd	Data Byte 1	Attenuator selection	0x01
4th	Data Byte 2	Attenuator value in 10 dB digit	0x00 to 0x03*1
5th	Data Byte 3	Attenuator value in 1 dB digit	0x00 to 0x09*1
6th	Data Byte 4	Attenuator value in 0.1 dB digit	0x00 or 0x05*1
7th	Checksum	Algebraic sum of bytes 1 - 6	

e.g.)

01	05	01	01	02	05	CHK

*1: Dynamic range and step size of the step attenuator: 31.5dB in 0.5dB step

ex) 12.5dB: Data byte 2 is 0x01; Data byte 3 is 0x02; Data byte 4 is 0x05

∗Above Specifications are subject to change without notice.

g. Get Step Attenuator Value (Command) / Response is in Section 2.5.g / [Command List]
This command can check the step attenuator setting value.

Byte	Name	Description	Value
1st	Address	BUC address (Default: 0x01)	0x01 to 0x0F
2nd	Command	Set Step Attenuator Value	0x06
3rd	Data Byte 1	Attenuator selection	0x01
4th	Data Byte 2	Not used	0xAA (Fixed)
5th	Data Byte 3	Not used	0xAA (Fixed)
6th	Data Byte 4	Not used	0xAA (Fixed)
7th	Checksum	Algebraic sum of bytes 1 - 6	

e.g.)

01	06	01	AA	AA	AA	CHK

h. Get Fan Status (Command) / Response is in Section 2.5.h / [Command List]
This command can acquire the status, alarm and operating time of the cooling fan.

Byte	Name	Description	Value
1st	Address	BUC address (Default: 0x01)	0x01 to 0x0F
2nd	Command	Get Fan Status	0x08
3rd	Data Byte 1	Not used	0xAA (Fixed)
4th	Data Byte 2	Not used	0xAA (Fixed)
5th	Data Byte 3	Not used	0xAA (Fixed)
6th	Data Byte 4	Not used	0xAA (Fixed)
7th	Checksum	Algebraic sum of bytes 1 - 6	

e.g.)

01	08	AA	AA	AA	AA	CHK

i. Get Voltage Status (Command) / Response is in Section 2.5.i / [Command List]
This command can check status and voltage value of internal voltage.

Byte	Name	Description	Value
1st	Address	BUC address (Default: 0x01)	0x01 to 0x0F
2nd	Command	Get Voltage Status	0x09
3rd	Data Byte 1	Monitor point selection CH1 – DC power input	0x01: CH1
4th	Data Byte 2	Not used	0xAA (Fixed)
5th	Data Byte 3	Not used	0xAA (Fixed)
6th	Data Byte 4	Not used	0xAA (Fixed)
7th	Checksum	Algebraic sum of bytes 1 – 6	

e.g.)

01	09	01	AA	AA	AA	CHK

∗Above Specifications are subject to change without notice.

j. Get Temperature Status (Command) / Response is in Section 2.5.j / [Command List]
This command can check temperature value of temperature sensor status.

Byte	Name	Description	Value
1st	Address	BUC address (Default: 0x01)	0x01 to 0x0F
2nd	Command	Get Temperature Status	0x0A
3rd	Data Byte 1	Temperature sensor point selection TEMP1 – PS(Power supply) TEMP2 – HPA TEMP3 – M&C	0x01 to 0x03 01: TEMP1 02: TEMP2 03: TEMP3
4th	Data Byte 2	Not used	0xAA (Fixed)
5th	Data Byte 3	Not used	0xAA (Fixed)
6th	Data Byte 4	Not used	0xAA (Fixed)
7th	Checksum	Algebraic sum of bytes 1 – 6	

e.g.)

01	0A	01	AA	AA	AA	CHK

k. Get Output Power Monitor (Command) / Response is in Section 2.5.k / [Command List]
This command can check power level of RF Output Power Monitor.

Byte	Name	Description	Value
1st	Address	BUC address (Default: 0x01)	0x01 to 0x0F
2nd	Command	Get Output Power Monitor	0x0B
3rd	Data Byte 1	Monitor point selection	0x01
4th	Data Byte 2	Not used	0xAA (Fixed)
5th	Data Byte 3	Not used	0xAA (Fixed)
6th	Data Byte 4	Not used	0xAA (Fixed)
7th	Checksum	Algebraic sum of bytes 1 – 6	

e.g.)

01	0B	00	AA	AA	AA	CHK

∗Above Specifications are subject to change without notice.

l. Set Parallel I/O Configuration (Command) / Response is in Section 2.5.l / [Command List]
This command can set the configuration of Transmit On/Off Control in Parallel I/O for each of disable/enable and Open/Close polarity.

Byte	Name	Description	Value
1st	Address	BUC address (Default: 0x01)	0x01 to 0x0F
2nd	Command	Set Parallel I/O Configuration	0x14
3rd	Data Byte 1	Disable/Enable configuration of Transmit On/Off Control (Default: 0x01 - Enable)	0x00: Disable 0x01: Enable
4th	Data Byte 2	Open/Close configuration for "TX ON" in Transmit On/Off Control (Default: 0x01 - Open)	0x00: Short 0x01: Open
5th	Data Byte 3	Not used	0xAA (Fixed)
6th	Data Byte 4	Not used	0xAA (Fixed)
7th	Checksum	Algebraic sum of bytes 1 – 6	

e.g.)

01	14	01	01	AA	AA	CHK

m. Get Parallel I/O Configuration (Command) / Response is in Section 2.5.m / [Command List]
This command can check the PS output terminals in the BUC.

Byte	Name	Description	Value
1st	Address	BUC address (Default: 0x01)	0x01 to 0x0F
2nd	Command	Get Parallel I/O Configuration	0x13
3rd	Data Byte 1	Not used	0xAA (Fixed)
4th	Data Byte 2	Not used	0xAA (Fixed)
5th	Data Byte 3	Not used	0xAA (Fixed)
6th	Data Byte 4	Not used	0xAA (Fixed)
7th	Checksum	Algebraic sum of bytes 1 - 6	

e.g.)

01	13	AA	AA	AA	AA	CHK

∗Above Specifications are subject to change without notice.

2.5. Response Message Structure (BUC to USER EQUIPMENT)

a. Request Summary Status (Response for command of Section 2.4.2.a) / [Command List]

Byte	Name	Description	Value
1st	Address	BUC address shifted left by 4 bits	0x10 to 0xF0
2nd	Power-1 *1	MS byte of output power monitor	0x00 to 0xFF
3rd	Power-2 *1	LS byte of output power monitor	0x00 to 0xFF
4th	Temperature *2	Maximum temperature of temperature monitors in deg. C	0x00 to 0xFF
5th	Status *3	Bit 0: Summary temperature alarm	1: Alarm / 0: Normal
		Bit 1: L.O. PLL out-of-Lock	1: Unlock / 0: Lock
		Bit 2: Checksum error	1: Error / 0: Normal
		Bit 3: Transmit On/Off status	1: TX ON / 0: TX OFF
		Bits 4-7: BUC power class	0x4
6th	Version *4	Bits 0-3: Minor software version	0x0 to 0xF
		Bits 4-7: Major software version	0x0 to 0xF
7th	Checksum	Algebraic sum of bytes 1 - 6	

e.g.)

10	0F	0A	40	48	12	CHK

*1: Data field definition for Output Power Monitor (Power-1 & Power-2)

Output power is the number which changed hexadecimal data into the decimal number and was divided by 100.

e.g.) Output Power Data — Output Power

Power-1(MS byte) is 0x0F, Power-2(LS byte) is 0x0A } 0x0F0A (hexadecimal) → 3850 (decimal) = +38.50 dBm

*2: Data field definition for Temperature

Temperature data is from -128 °C to +127 °C in two's complement (1 °C step).

e.g.) Byte of Temperature is 0xD8 → 11011000 = -40 °C

Byte of Temperature is 0xFF → 11111111 = -1 °C

Byte of Temperature is 0x40 → 01000000 = 64 °C

*3: Data field definition for Status

e.g.) Status is 0x48 → 01001000

Bit 7	Bit 6	Bit 5	Bit 4	Bit 3	Bit 2	Bit 1	Bit 0
0	1	0	0	1	0	0	0
8W Refer to following table				TX ON	Normal	Lock	Normal

Table: BUC power class

Value	0x1	0x2	0x3	0x4	0x5	0x6	0x7	0x8	0x9	0xA
Power Class	2W	4W	5W	8W	10W	16W	20W	25W	40W	60W

*4: Data field definition for Version

e.g.) Version is 0x12 → Software version 1.2

∗Above Specifications are subject to change without notice.

b. Request Alarm Status (Response for command of Section 2.4.2.b) / [Command List]

Byte	Name	Description	Value
1st	Address	BUC address shifted left by 4	0x10 to 0xF0
2nd	Data Byte 1	Summary alarm status *1	0x00 to 0xFF
3rd	Data Byte 2	Voltage / Temperature alarm status *2	0x00 to 0xFF
4th	Data Byte 3	Extension alarm status *3	0x01 to 0x07
5th	Data Byte 4	Extension monitor status *4	0x00 to 0xFF
6th	Data Byte 5	Not used	0xAA (Fixed)
7th	Checksum	Algebraic sum of bytes 1 - 6	

e.g.)

10	89	10	07	00	AA	CHK

*1: Data field definition for Summary alarm status

Bit 0	Summary temperature alarm	1: Alarm / 0: Normal
Bit 1	L.O. PLL out-of-Lock	1: Unlock / 0: Lock
Bit 2	Out of voltage of DC power input	1: Alarm / 0: Normal
Bit 3	Not used	0: Fixed
Bit 4	Fan rotation alarm	1: Alarm / 0: Normal
Bit 5	Fan lifetime alarm	1: Over / 0: Healthy
Bit 6	Over power for HPA input	1: Alarm / 0: Normal
Bit 7	Summary alarm	1: Alarm / 0: Normal

e.g.) Data Byte 1 is 0x89 → 10001001

Bit 7	Bit 6	Bit 5	Bit 4	Bit 3	Bit 2	Bit 1	Bit 0
1	0	0	0	1	0	0	1
Alarm	Normal	Healthy	Normal	Alarm	---	Lock	Alarm

*2: Data field definition for Voltage / Temperature alarm status

Bit 0	High voltage alarm of CH1 – DC power input	1: Alarm / 0: Normal
Bit 1-3	Not used	0: Fixed
Bit 4	Over temperature of TEMP1 – PS(Power supply)	1: Alarm / 0: Normal
Bit 5	Over temperature of TEMP2 – HPA	1: Alarm / 0: Normal
Bit 6	Over temperature of TEMP3 – M&C	1: Alarm / 0: Normal
Bit 7	Not used	0: Fixed

e.g.) Data Byte 2 is 0x10 → 00010000

Bit 7	Bit 6	Bit 5	Bit 4	Bit 3	Bit 2	Bit 1	Bit 0
0	0	0	1	0	0	0	0
---	Normal	Normal	Alarm	---	---	---	Normal

*3: Data field definition for Extension alarm status

Bit 0	Not used	1: Fixed
Bit 1	Summary current alarm	1: Alarm / 0: Normal
Bit 2	Voltage alarm for internal negative voltage	1: Alarm / 0: Normal
Bit 3-7	Not used	0: Fixed

e.g.) Data Byte 3 is 0x07 → 00000111

Bit 7	Bit 6	Bit 5	Bit 4	Bit 3	Bit 2	Bit 1	Bit 0
0	0	0	0	0	1	1	1
---	---	---	---	---	Alarm	Alarm	---

*4: Data field definition for Extension monitor status

Bit 0	Low voltage alarm of CH1 – DC power input	1: Alarm / 0: Normal
Bit 1-3	Not used	0: Fixed
Bit 4	Over current alarm of HPA	1: Alarm / 0: Normal
Bit 5-7	Not used	0: Fixed

e.g.) Data Byte 4 is 0x10 → 00010000

Bit 7	Bit 6	Bit 5	Bit 4	Bit 3	Bit 2	Bit 1	Bit 0
0	0	0	1	0	0	0	0
---	---	---	Alarm	---	---	---	Normal

c. Set Transmit On/Off Control (Response for command of Section 2.4.2.c) / [Command List]

Byte	Name	Description	Value
1st	Address	BUC address shifted left by 4	0x10 to 0xF0
2nd	Data Byte 1	Transmit On/Off	0x00: TX OFF 0x01: TX ON
3rd	Data Byte 2	Not used	0xAA (Fixed)
4th	Data Byte 3	Not used	0xAA (Fixed)
5th	Data Byte 4	Not used	0xAA (Fixed)
6th	Data Byte 5	Not used	0xAA (Fixed)
7th	Checksum	Algebraic sum of bytes 1 - 6	

e.g.)

10	01	AA	AA	AA	AA	CHK

∗Above Specifications are subject to change without notice.

d. Set BUC Address (Response for command of Section 2.4.2.d) / [Command List]

Byte	Name	Description	Value
1st	Address	BUC address shifted left by 4	0x10 to 0xF0
2nd	Data Byte 1	New address	0x01 to 0x0F
3rd	Data Byte 2	Not used	0xAA (Fixed)
4th	Data Byte 3	Not used	0xAA (Fixed)
5th	Data Byte 4	Not used	0xAA (Fixed)
6th	Data Byte 5	Not used	0xAA (Fixed)
7th	Checksum	Algebraic sum of bytes 1 - 6	

e.g.)

10	0F	AA	AA	AA	AA	CHK

e. Get BUC Address (Response for command of Section 2.4.2.e) / [Command List]

Byte	Name	Description	Value
1st	Dummy Byte	Not used	0xAA (Fixed)
2nd	Data Byte 1	BUC address	0x01 to 0x0F
3rd	Data Byte 2	Not used	0xAA (Fixed)
4th	Data Byte 3	Not used	0xAA (Fixed)
5th	Data Byte 4	Not used	0xAA (Fixed)
6th	Data Byte 5	Not used	0xAA (Fixed)
7th	Checksum	Algebraic sum of bytes 1 - 6	

e.g.)

AA	01	AA	AA	AA	AA	CHK

f. Set Step Attenuator Value (Response for command of Section 2.4.2.f) / [Command List]

Byte	Name	Description	Value
1st	Address	BUC address shifted left by 4	0x10 to 0xF0
2nd	Data Byte 1	Attenuator selection	0x01
3rd	Data Byte 2	Set Att. bit in 10 dB digit	0x00 to 0x01
4th	Data Byte 3	Set Att. bit in 1 dB digit	0x00 to 0x09
5th	Data Byte 4	Set Att. bit in 0.5 dB digit	0x00 to 0x05
6th	Data Byte 5	Not used	0xAA (Fixed)
7th	Checksum	Algebraic sum of bytes 1 - 6	

e.g.)

10	01	01	02	05	AA	CHK

∗Above Specifications are subject to change without notice.

g. Get Step Attenuator Value (Response for command of Section 2.4.2.g) / [Command List]

Byte	Name	Description	Value
1st	Address	BUC address shifted left by 4	0x10 to 0xF0
2nd	Data Byte 1	Attenuator selection	0x01
3rd	Data Byte 2	Set Att. bit in 10 dB digit	0x00 to 0x01
4th	Data Byte 3	Set Att. bit in 1 dB digit	0x00 to 0x09
5th	Data Byte 4	Set Att. bit in 0.5 dB digit	0x00 to 0x05
6th	Data Byte 5	Not used	0xAA (Fixed)
7th	Checksum	Algebraic sum of bytes 1 - 6	

e.g.)

10	01	01	02	05	AA	CHK

h. Get Fan Status (Response for command of Section 2.4.2.h) / [Command List]

Byte	Name	Description	Value
1st	Address	BUC address shifted left by 4	0x10 to 0xF0
2nd	Data Byte 1	Fan status & alarm *1	0x00 to 0x1F
3rd	Data Byte 2	Fan operating time data 1 *2	0x00 to 0xFF
4th	Data Byte 3	Fan operating time data 2 *2	0x00 to 0xFF
5th	Data Byte 4	Fan operating time data 3 *2	0x00 to 0xFF
6th	Data Byte 5	Fan Duty	0x00 to 0x64
7th	Checksum	Algebraic sum of bytes 1 - 6	

e.g.)

10	12	21	FF	1F	AA	CHK

*1: Data field definition for Fan status & alarm

Bit 0	Fan rotation alarm	1: Alarm / 0: Normal
Bit 1	Fan lifetime alarm	1: Over / 0: Healthy
Bit 2-3	Not used	1: Fixed
Bit 4	Fan status	1: Move / 0: Stop
Bit 5-7	Not used	0: Fixed

e.g.) Data Byte 1 is 0x12 → 00011110

Bit 7	Bit 6	Bit 5	Bit 4	Bit 3	Bit 2	Bit 1	Bit 0
0	0	0	1	1	1	1	0
---	---	---	Move	---	---	Over	Normal

*2: Data field definition for Fan operating time

The operating of a cooling fan is counted per minute.

Maximum time data is 0xFFFFFF. (31.92years)

e.g.) Fan operating time

Data Byte 2 is 0x21
Data Byte 3 is 0xFF
Data Byte 4 is 0x1F

} 0x21FF1F (hexadecimal) → 2227999 (decimal) = 2,227,999 min → 4.2 years

∗Above Specifications are subject to change without notice.

i. Get Voltage Status (Response for command of Section 2.4.2.i) / [Command List]

Byte	Name	Description	Value
1st	Address	BUC address shifted left by 4	0x10 to 0xF0
2nd	Data Byte 1	Monitor point selection CH1 – DC power input	0x01: CH1
3rd	Data Byte 2	Voltage alarm *1	0x00 to 0x02 *1
4th	Data Byte 3	Voltage data 1 *2	0x00 to 0xFF *2
5th	Data Byte 4	Voltage data 2 *2	0x00 to 0xFF *2
6th	Data Byte 5	Not used	0xAA (Fixed)
7th	Checksum	Algebraic sum of bytes 1 - 6	

e.g.)

10	01	00	02	8A	AA	CHK

*1: Data field definition for Voltage alarm

0x00: Normal; 0x01: Under voltage alarm; 0x02: Over voltage alarm

*2: Data field definition for Voltage data

The internal voltage is the number which changed hexadecimal data into the decimal number and was divided by 100.

e.g.) Internal Voltage

Data Byte 3 is 0x02
Data Byte 4 is 0x8A } 0x028A (hexadecimal) → 650 (decimal) = 6.5 V

j. Get Temperature Status (Response for command of Section 2.4.2.j) / [Command List]

Byte	Name	Description	Value
1st	Address	BUC address shifted left by 4	0x10 to 0xF0
2nd	Data Byte 1	Temperature sensor point selection	01: TEMP1 - PS 02: TEMP2 -HPA 03: TEMP3 – M&C
3rd	Data Byte 2	Temperature alarm	0x00: Normal 0x01: Fail
4th	Data Byte 3	Temperature in deg. C *1	0x00 to 0xFF
5th	Data Byte 4	Not used	0xAA (Fixed)
6th	Data Byte 5	Not used	0xAA (Fixed)
7th	Checksum	Algebraic sum of bytes 1 - 6	

e.g.)

10	01	00	40	AA	AA	CHK

*1: Data field definition for Temperature

Temperature data is from -128°C to +127°C in two's complement (1°C step).

e.g.) Temperature Data

Data Byte 3 is 0xD8 → 11011000 = -40 °C
Data Byte 3 is 0xFF → 11111111 = -1 °C
Data Byte 3 is 0x40 → 01000000 = 64 °C

∗Above Specifications are subject to change without notice.

k. Get Output Power Monitor (Response for command of Section 2.4.2.k) / [Command List]

Byte	Name	Description	Value
1st	Address	BUC address shifted left by 4	0x10 to 0xF0
2nd	Data Byte 1	Monitor point selection	0x01
3rd	Data Byte 2	Status *1	0x00 to 0x03
4th	Data Byte 3	MS byte of output power monitor *2	0x00 to 0xFF
5th	Data Byte 4	LS byte of output power monitor *2	0x00 to 0xFF
6th	Data Byte 5	Not used	0xAA (Fixed)
7th	Checksum	Algebraic sum of bytes 1 - 6	

e.g.)

10	00	00	11	C6	AA	CHK

*1: Data field definition for Status

Bit 0	Not used	0: Fixed
Bit 1	Over power for HPA input	1: Alarm / 0: Normal
Bit 2-7	Not used	0: Fixed

e.g.) Data Byte 2 is 0x02 → 00000010

Bit 7	Bit 6	Bit 5	Bit 4	Bit 3	Bit 2	Bit 1	Bit 0
0	0	0	0	0	0	1	0
---	---	---	---	---	---	Alarm	---

*2: Data field definition for Output Power Monitor (Data Byte 3 & Data Byte 4)

Output power is the number which changed hexadecimal data into the decimal number and was divided by 100.

e.g.) Output Power Data

Data Byte 3 is 0x0F
Data Byte 4 is 0x0A } 0x0F0A (hexadecimal) → 3850 (decimal) = +38.50 dBm

Output Power

l. Set Parallel I/O Configuration (Response for command of Section 2.4.2.l) / [Command List]

Byte	Name	Description	Value
1st	Address	BUC address shifted left by 4	0x10 to 0xF0
2nd	Data Byte 1	Disable/Enable configuration of Transmit On/Off Control	0x00: Disable 0x01: Enable
3rd	Data Byte 2	Open/Close configuration for "TX ON" in Transmit On/Off Control	0x00: Short 0x01: Open
4th	Data Byte 3	Not used	0xAA (Fixed)
5th	Data Byte 4	Not used	0xAA (Fixed)
6th	Data Byte 5	Not used	0xAA (Fixed)
7th	Checksum	Algebraic sum of bytes 1 - 6	

e.g.)

01	00	00	AA	AA	AA	CHK

∗Above Specifications are subject to change without notice.

m. Get Parallel I/O Configuration (Response for command of Section 2.4.2.m) / [Command List]

Byte	Name	Description	Value
1st	Address	BUC address shifted left by 4	0x10 to 0xF0
2nd	Data Byte 1	Disable/Enable configuration of Transmit On/Off Control	0x00: Disable 0x01: Enable
3rd	Data Byte 2	Open/Close configuration for "TX ON" in Transmit On/Off Control	0x00: Short 0x01: Open
4th	Data Byte 3	Not used	0xAA (Fixed)
5th	Data Byte 4	Not used	0xAA (Fixed)
6th	Data Byte 5	Not used	0xAA (Fixed)
7th	Checksum	Algebraic sum of bytes 1 - 6	

e.g.)

01	00	00	AA	AA	AA	CHK

∗Above Specifications are subject to change without notice.

3. Ethernet M&C

3.1. Standard — 10BASE-T/100BASE-TX

3.2. IP Address — Static IP (Default, DHCP off) *Note1
IP address: 192.168.0.127 (Default)*Note1
Subnet mask default:255.255.255.0

*Note1: Refer to Section 3.6 to change the Static IP address or enable Dynamic allocation.

3.3. Protocol — HTTP on TCP - Port No: 80
SNMP-v2c on UDP - Port No: 161/162
* BUC works as a SNMP Agent

3.4. HTTP / Web Browser M&C
URL - http://<IP Address>/user/index.html
IP Address Default: 192.168.0.127

The BUC can be monitored and controlled via the Web Browser. Users can check various statuses and alarms and set the control configuration.

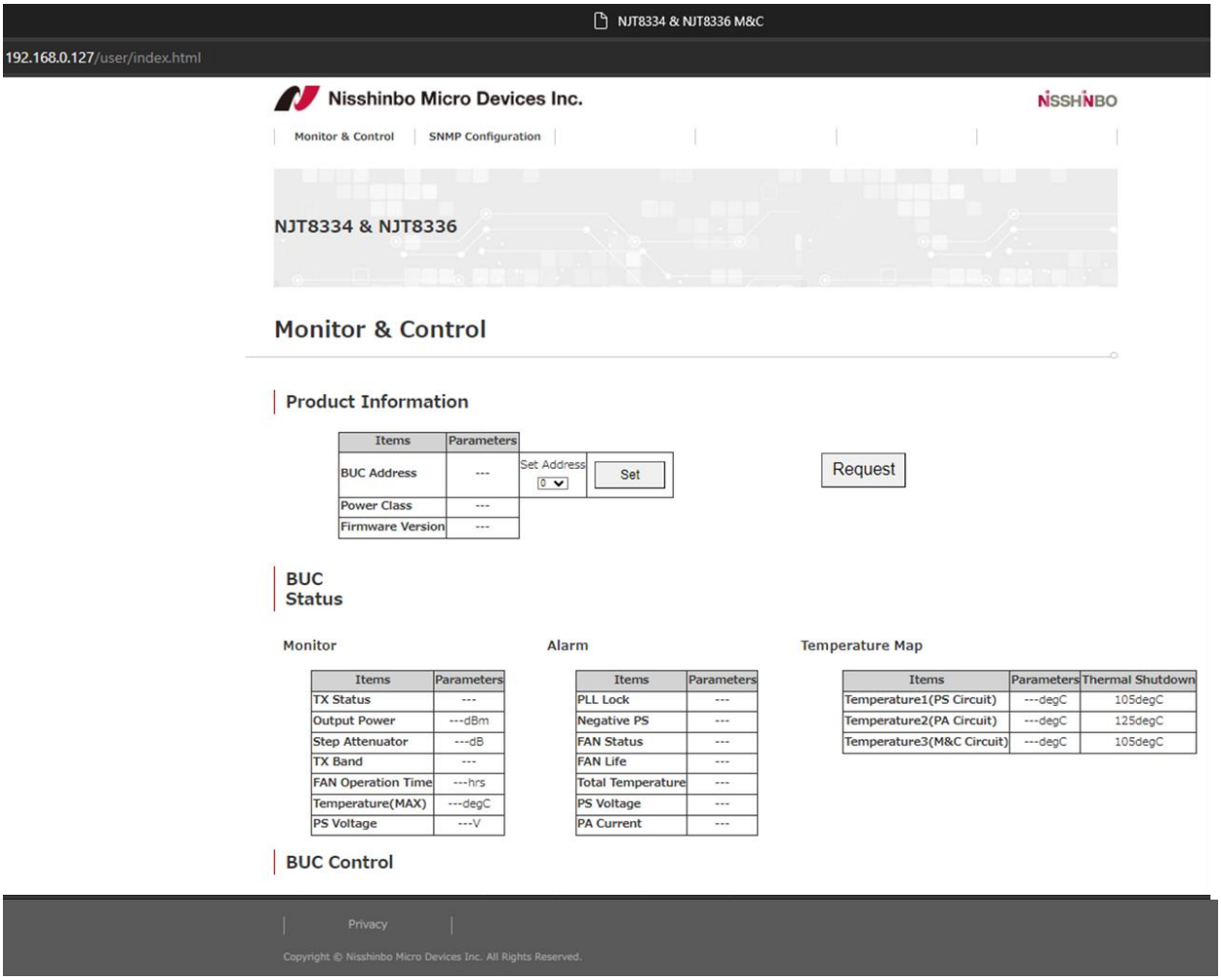

＊Above Specifications are subject to change without notice.

3.5. SNMP Configuration

URL - http://<IP Address>

IP Address Default:192.168.0.127

USERNAME: admin

PASSWORD: NISD_BUC_PW

Users can view current SNMP configuration and change the settings.

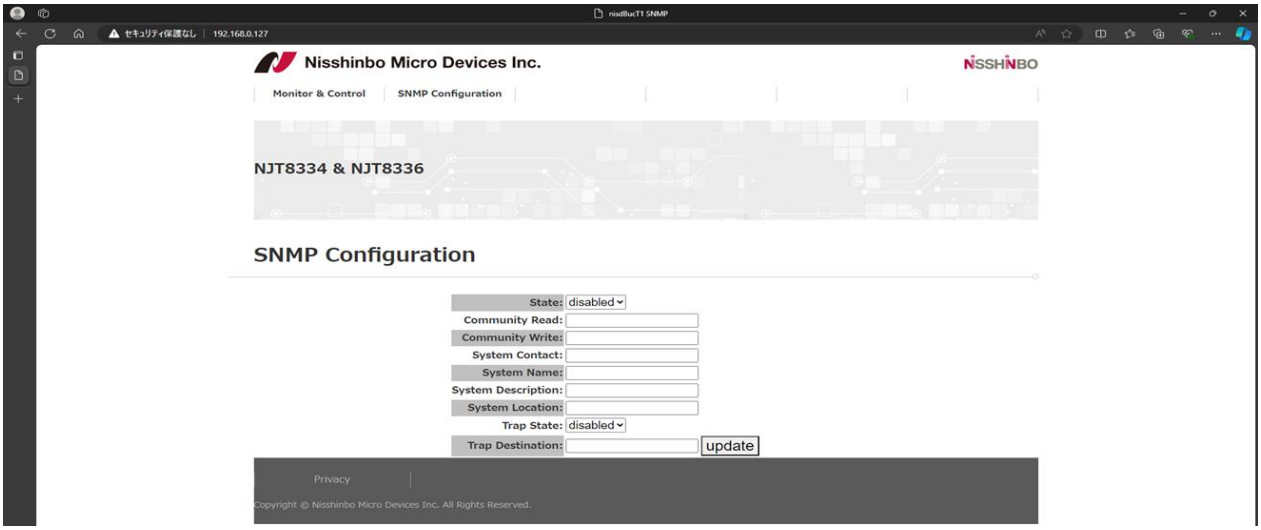

3.5.1. Enable SNMP function

The SNMP function will be enabled by setting the State to "enabled" and clicking the [update] button. Additionally, it is mandatory to set the community (Community Read and Community Write) and Trap.

The standard usage is to set Community Read to "public" and Community Write to "private".

To enable trap transmission for FaultStatus and PAStatus, set Trap State to "enabled." At this time, it is necessary to set the trap destination address.

To change the SNMP function, the [UPDATE] button need to be clicked. This will update all settings at once.

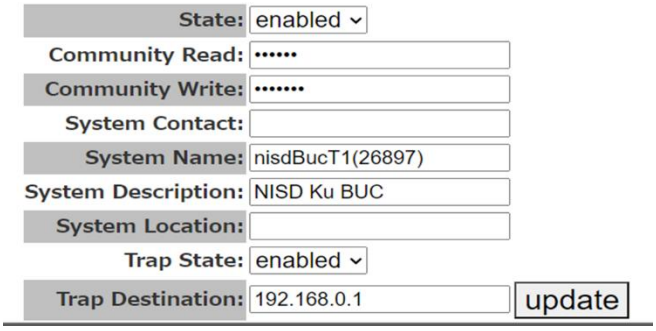

＊Above Specifications are subject to change without notice.

3.5.2. SNMP Definition

```
----- Definition ----------------------------------------------------------------------------------------
NISDBUCT1-MIB DEFINITIONS :: = BEGIN
IMPORTS
        MODULE-IDENTITY, OBJECT-TYPE, enterprises, Counter32, Gauge32,
        NOTIFICATION-TYPE                                FROM SNMPv2-SMI
;
ltx                     OBJECT IDENTIFIER ::= { enterprises 244 }
products                OBJECT IDENTIFIER ::= { ltx 1 }
evo                     OBJECT IDENTIFIER ::= { products 13 }
nisdBucT1 MODULE-IDENTITY
        LAST-UPDATED "2024008260000Z"
        ORGANIZATION "Nissinbo Micro Devices Inc."
        CONTACT-INFO "https://www.nisshinbo-microdevices.co.jp/"
        DESCRIPTION "First draft for nisdBucT1"
        ::= { evo 26897 } -- 6911h
--
=-- Notifications
--
nbt1Notifications                       OBJECT IDENTIFIER ::= { nisdBucT1 1 }
nbt1FaultStatus OBJECT-TYPE
        SYNTAX INTEGER {normal (0), failed (1)}
        MAX-ACCESS read-only
        STATUS current
        DESCRIPTION
        "Overall fault status excluding the status related to the fan.
            0 - normal, 1 - failed."
        ::= { nbt1Notifications 1 }
nbt1PAStatus OBJECT-TYPE
        SYNTAX          INTEGER {mute (0), unmute (1)}
        MAX-ACCESS      read-only
        STATUS          current
        DESCRIPTION
        "Output status of the power amplifier.
            0 - mute, 1 - unmute."
        ::= { nbt1Notifications 2 }
--
=-- Configurations
--
```

＊Above Specifications are subject to change without notice.

```
nbt1Configurations                    OBJECT IDENTIFIER ::= { nisdBucT1 2 }
nbt1BucAddress OBJECT-TYPE
        SYNTAX          INTEGER (0..15)
        MAX-ACCESS      read-write
        STATUS          current
        DESCRIPTION
        "Inner device ID. The range from 0 to 15 can be set.
            Default value: 1."
        ::= { nbt1Configurations 1 }
nbt1PAControl OBJECT-TYPE
        SYNTAX          INTEGER {Off (0), On (1)}
        MAX-ACCESS      read-write
        STATUS          current
        DESCRIPTION
        "Set the state of the power amplifier.
            0 - Off, 1 - On.
         The power amplifier can output when both this value and the discrete signal (external
         unmute) are enabled.
         The fault status related to the power amplifier can be cleared by setting it to be enabled
         again, after the cause of the problem is solved.
         Returns 65535 until the first write."
        ::= { nbt1Configurations 2 }
nbt1ATTControl OBJECT-TYPE
        SYNTAX          INTEGER (0..315)
        UNITS           "x 0.1 dB"
        MAX-ACCESS      read-write
        STATUS          current
        DESCRIPTION
        "Set the attenuation level of the attenuator. The range from 0 to 315 (in tenths of a dB, 0.5dB
         steps) can be set."
        ::= { nbt1Configurations 3 }
        SYNTAX          INTEGER {disabled (0), enabled (1)}
        MAX-ACCESS      read-write
        STATUS          current
        DESCRIPTION
        "Set the state of the external GPIO control.
            0 - disabled, 1 - enabled.
         If this value is disabled, the power amplifier can output only when the PA control is enabled.
         Otherwise, the power amplifier can output when both the PA control and the discrete signal
         (external unmute) are enabled."
```

∗Above Specifications are subject to change without notice.

```
        ::= { nbt1Configurations 4 }
nbt1ExtUnmuteState OBJECT-TYPE
        SYNTAX          INTEGER {short (0), open (1)}
        MAX-ACCESS      read-write
        STATUS          current
        DESCRIPTION
        "Set the ON level of the discrete signal (external unmute).
            0 - short, 1 - open.
         This value works only when the control (ExtMuteControl) is enabled."
        ::= { nbt1Configurations 5 }
nbt1BANDSelection OBJECT-TYPE
        SYNTAX INTEGER { universal(0), standard(1) }
        MAX-ACCESS read-only
        STATUS current
        DESCRIPTION
        "the BUC band filter.
            0 - universal (wideband), 1 - standard."
        ::= { nbt1Configurations 6 }
--
=-- Informations
--
nbt1Informations                        OBJECT IDENTIFIER ::= { nisdBucT1 3 }
nbt1ProductInfo OBJECT-TYPE
        SYNTAX          INTEGER {   Ku-0W (0),
                                    Ku-2W (1),
                                    Ku-4W (2),
                                    Ku-5W (3),
                                    Ku-8W (4),
                                    Ku-10W (5),
                                    Ku-16W (6),
                                    Ku-20W (7),
                                    Ku-25W (8),
                                    Ku-40W (9),
                                    Ku-60W (10)   }
        MAX-ACCESS      read-only
        STATUS          current
        DESCRIPTION
        "Saturation output power of the BUC."
        ::= { nbt1Informations 1 }
```

∗Above Specifications are subject to change without notice.

```
nbt1SoftwareInfo OBJECT-TYPE
        SYNTAX          INTEGER (0..15)
        UNITS           "ver."
        MAX-ACCESS      read-only
        STATUS          current
        DESCRIPTION
        "Version of the BUC function."
        ::= { nbt1Informations 2 }
nbt1FaultFactor                         OBJECT IDENTIFIER ::= { nbt1Informations 3 }
nbt1NegativePSStatus OBJECT-TYPE
        SYNTAX          INTEGER {normal (0), failed (1)}
        MAX-ACCESS      read-only
        STATUS          current
        DESCRIPTION
        "Fault status of the NegativePS.
            0 - normal, 1 - failed."
        ::= { nbt1FaultFactor 1 }
nbt1DriverCurrentStatus OBJECT-TYPE
        SYNTAX          INTEGER {normal (0), overcurrent (1)}
        MAX-ACCESS      read-only
        STATUS          current
        DESCRIPTION
        "Fault status of the power amplifier driver.
            0 - normal, 1 - over current."
        ::= { nbt1FaultFactor 2 }
nbt1TemperatureStatus OBJECT-TYPE
        SYNTAX          INTEGER {normal(0), overtemperature(1)}
        MAX-ACCESS      read-only
        STATUS          current
        DESCRIPTION
        "Fault status of the temperature.
            0 - normal, 1 - over temperature."
        ::= { nbt1FaultFactor 3 }
nbt1PLLStatus OBJECT-TYPE
        SYNTAX          INTEGER {lock (0), unlock (1)}
        MAX-ACCESS      read-only
        STATUS          current
        DESCRIPTION
        "Fault status of the PLL.
            0 - lock, 1 - unlock."
```

∗Above Specifications are subject to change without notice.

```
        ::= { nbt1FaultFactor 4 }
nbt1PowerSupplyStatus OBJECT-TYPE
        SYNTAX          INTEGER {normal (0), low voltage (1), over voltage (2)}
        MAX-ACCESS      read-only
        STATUS          current
        DESCRIPTION
        "Fault status of the power supply.
            0 - normal, 1 - low voltage, 2 - over voltage."
        ::= { nbt1FaultFactor 5 }
nbt1FANOperatoinStatus OBJECT-TYPE
        SYNTAX          INTEGER {normal (0), fanfailed (1)}
        MAX-ACCESS      read-only
        STATUS          current
        DESCRIPTION
        "Operation status of the fan.
            0 - normal, 1 - failed."
        ::= { nbt1FaultFactor 6 }
nbt1FANLifetimeStatus OBJECT-TYPE
        SYNTAX          INTEGER {normal (0), fan lifetime (1)}
        MAX-ACCESS      read-only
        STATUS          current
        DESCRIPTION
        "Operation time status of the fan.
            0 - normal, 1 - expired."
        ::= { nbt1FaultFactor 7 }
nbt1FANOperationTime OBJECT-TYPE
        SYNTAX          INTEGER (0..16777215)
        UNITS           "mins"
        MAX-ACCESS      read-only
        STATUS          current
        DESCRIPTION
        "Current operation time (in minutes) of the fan."
        ::= { nbt1Informations 4 }
nbt1FANOperationTime OBJECT-TYPE
        SYNTAX          INTEGER (0..16777215)
        UNITS           "mins"
        MAX-ACCESS      read-only
        STATUS          current
        DESCRIPTION
        "Current operation time (in minutes) of the fan."
```

∗Above Specifications are subject to change without notice.

```
        ::= { nbt1Informations 4 }
nbt1PAPower OBJECT-TYPE
        SYNTAX          INTEGER (0..65535)
        UNITS           "x 0.01 dBm"
        MAX-ACCESS      read-only
        STATUS          current
        DESCRIPTION
        "Output power (in hundredths of a dBm) of the power amplifier."
        ::= { nbt1Informations 5 }
nbt1TemperatureMax OBJECT-TYPE
        SYNTAX          INTEGER (-128..127)
        UNITS           "degC"
        MAX-ACCESS      read-only
        STATUS          current
        DESCRIPTION
        "Maximum inner temperature (in deg C)."
        ::= { nbt1Informations 6 }
nbt1Temperature1 OBJECT-TYPE
        SYNTAX          INTEGER (-128..127)
        UNITS           "degC"
        MAX-ACCESS      read-only
        STATUS          current
        DESCRIPTION
        "Inner temperature of PS Circuit (in deg C)."
        ::= { nbt1Informations 7 }
nbt1Temperature2 OBJECT-TYPE
        SYNTAX          INTEGER (-128..127)
        UNITS           "degC"
        MAX-ACCESS      read-only
        STATUS          current
        DESCRIPTION
        "Inner temperature of PA Circuit (in deg C)."
        ::= { nbt1Informations 8 }
nbt1Temperature3 OBJECT-TYPE
        SYNTAX          INTEGER (-128..127)
        UNITS           "degC"
        MAX-ACCESS      read-only
        STATUS          current
        DESCRIPTION
        "Inner temperature of M&C Circuit (in deg C)."
```

∗Above Specifications are subject to change without notice.

```
::= { nbt1Informations 9 }
nbt1PowerSupply OBJECT-TYPE
        SYNTAX          INTEGER (0..65535)
        UNITS           "x 0.01 V"
        MAX-ACCESS      read-only
        STATUS          current
        DESCRIPTION
        "Inner voltage (in hundredths of a V) of the power supply."
        ::= { nbt1Informations 10 }
END
------------------------------------------------------------------------------------------------------ End -----
```

∗Above Specifications are subject to change without notice.

3.6. Instruction of change of IP Address / DHCP configuration

3.6.1. Set-up

This session describes the necessary preparations for change of IP address / DHCP configuration.

I. Download "NJT833X_DHCP_Change tool" from website link and unzip it in a local folder of User's control computer.

This file is as follows:

"NJT833X_DHCP_disable": Use this if you want to disable DHCP or static IP Address.

"NJT833X_DHCP_enable": Use this if you want to enable DHCP.

"search_tool": Don't use this folder. Please don't delete and move.

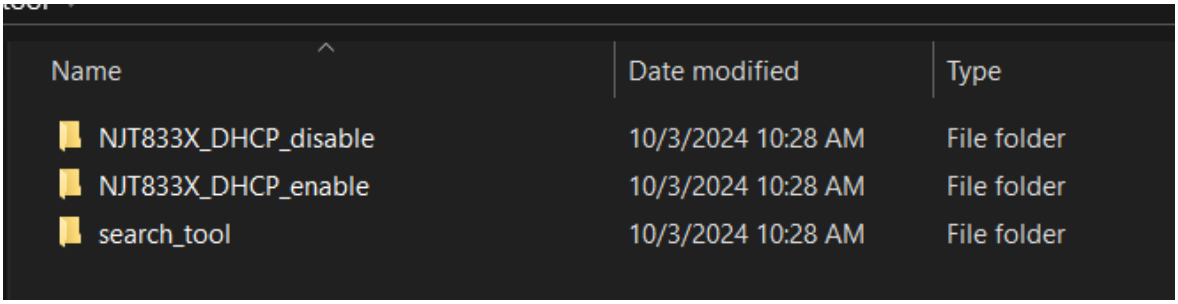

Name	Date modified	Type
NJT833X_DHCP_disable	10/3/2024 10:28 AM	File folder
NJT833X_DHCP_enable	10/3/2024 10:28 AM	File folder
search_tool	10/3/2024 10:28 AM	File folder

II. Connect the control computer and BUC on a one-to-one basis (including the router in the case of DHCP Enable) before implementing the following settings. If other devices are connected to the same network as the BUC and control computer, it may not be possible to successfully implement the settings.

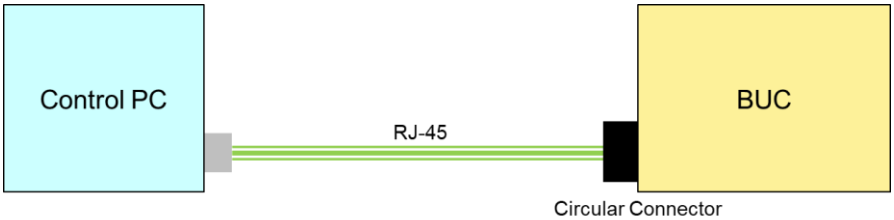

OR

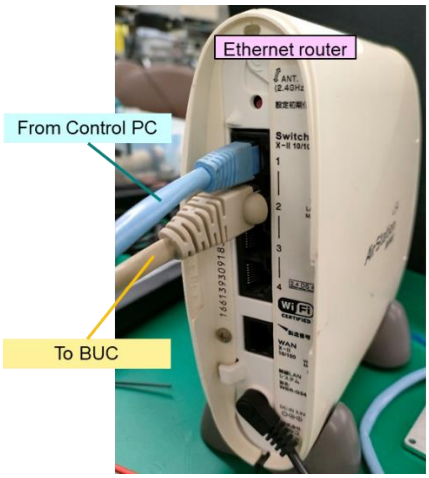

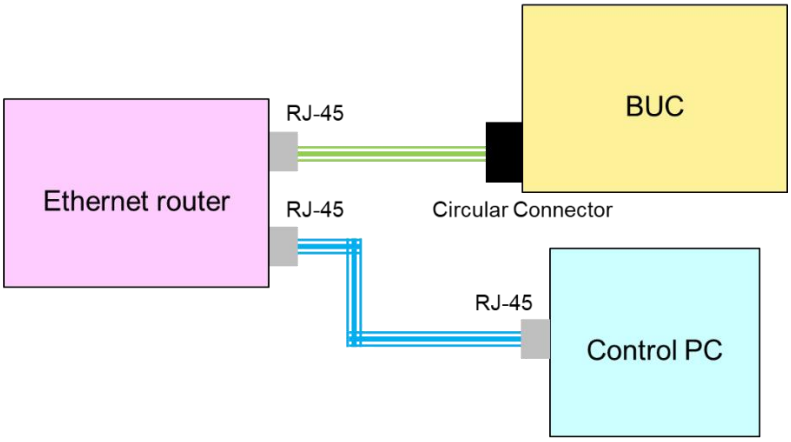

＊Above Specifications are subject to change without notice.

3.6.2. DHCP Disabled to Enabled

This section describes the procedure for enabling DHCP when BUC is running with DHCP disabled.

I. Connect the control computer and BUC with direct connection(a one-to-one basis).
The control computer must be changed to a static IP Address “Use the following IP address” and the IP address must be set to

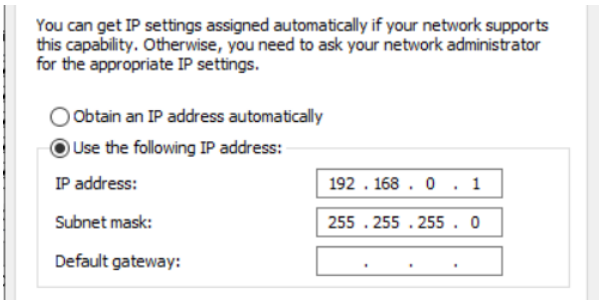

II. Open the folder of “NJT833X_DHCP_enble” and double click “NJT833X_change_DHCPClient_enable.bat “.

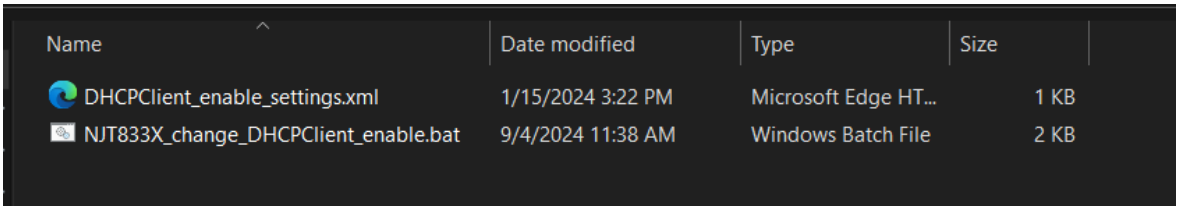

III. If the change is successful, you will see a blue screen;
if not (failed), you will see a red screen and check your connection and run the batch file again.

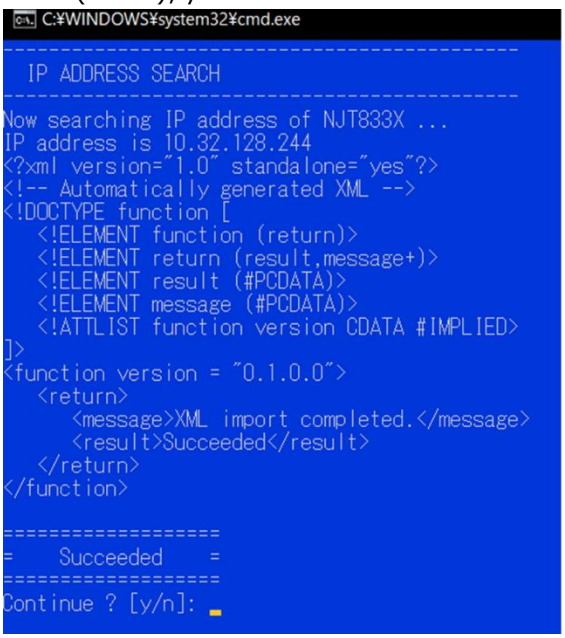

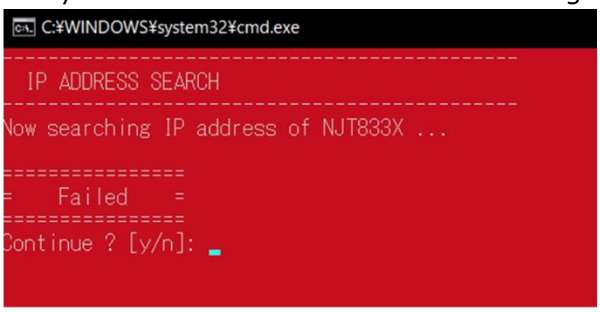

IV. After the changes are successful, enter “n” and click Enter to exit the batch file.

V. Turn off and on BUC power for the changes to take effect.
*Settings will be activated after the BUC power is rebooted

3.6.3. DHCP Enabled to Disabled

This section describes the procedure for disabling DHCP and setting a static IP address to a BUC that is running with DHCP enabled.

I. Connect the control computer and BUC via ethernet router. If other devices are connected to the same network as the BUC and control computer, it may not be possible to successfully implement the settings.
The control computer must be changed to a dynamic IP Address “Obtain an IP address automatically”

II. Open the folder of “NJT833X_DHCP_disable”.

Name	Date modified	Type	Size
DHCPClient_disable_settings.xml	7/3/2024 4:02 PM	Microsoft Edge HT...	1 KB
NJT833X_change_DHCPClient_disable.bat	9/4/2024 11:35 AM	Windows Batch File	2 KB

III. Open “DHCPClient_disable_settings.xml” using a text editor. And change it to the IP address and Subnet mask you want to set and save it.
(Default - IP address: 192.168.0.127; Subnet mask: /24 [255.255.255.0])

DHCPClient_disable_settings.xml - Notepad

File Edit Format View Help

```
<?xml version="1.0" standalone="yes"?>
<!DOCTYPE configrecord [
   <!ELEMENT configrecord (configgroup+)>
   <!ELEMENT configgroup (configitem+)>
   <!ELEMENT configitem (value+)>
   <!ELEMENT value (#PCDATA)>
   <!ATTLIST configrecord version CDATA #IMPLIED>
   <!ATTLIST configgroup name CDATA #IMPLIED>
   <!ATTLIST configgroup instance CDATA #IMPLIED>
   <!ATTLIST configitem name CDATA #IMPLIED>
   <!ATTLIST configitem instance CDATA #IMPLIED>
   <!ATTLIST value name CDATA #IMPLIED>
]>
<configrecord version = "0.1.0.1">
   <configgroup name = "Interface" instance = "eth0">
      <configitem name = "DHCP Client">
         <value>Disabled</value>
      </configitem>
      <configitem name = "IP Address">
         <value>192.168.0.127/24</value>
      </configitem>
   </configgroup>
</configrecord>
```

IP address and Subnet mask

IV. Double Click “NJT833X_change_DHCPClient_disable.bat.

V. If the change is successful, you will see a blue screen;
if not (failed), you will see a red screen and check your connection and run the batch file again.

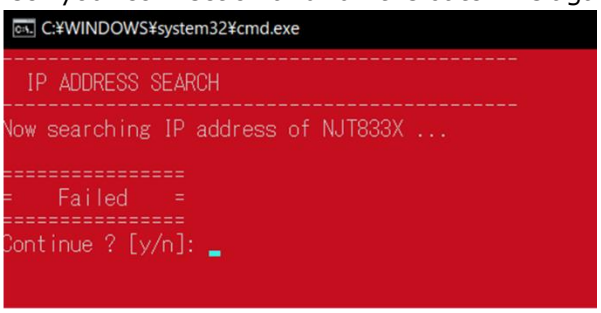

VI. After the changes are successful, enter “n” and click Enter to exit the batch file.

VII. Turn off and on BUC power for the changes to take effect.
*Settings will be activated after the BUC power is rebooted

＊Above Specifications are subject to change without notice.

3.6.4. Change static IP Address

This section describes the procedure for changing the static IP address of a BUC that is running with DHCP disabled and a static IP address.

I. Connect the control computer and BUC with direct connection(a one-to-one basis).
The control computer must be changed to a static IP Address “Use the following IP address” and the IP address must be set to

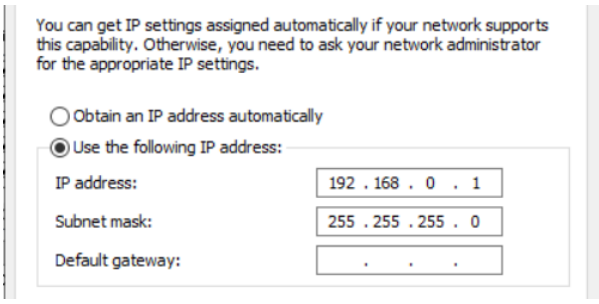

II. Open the folder of “NJT833X_DHCP_disable”.

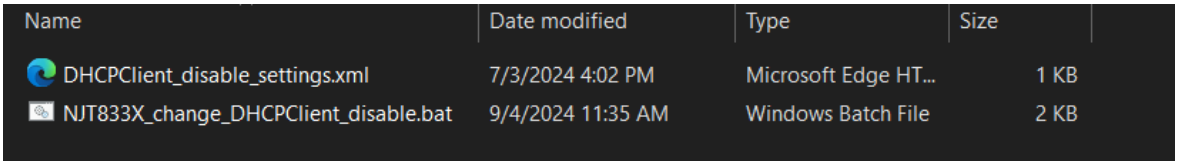

Name	Date modified	Type	Size
DHCPClient_disable_settings.xml	7/3/2024 4:02 PM	Microsoft Edge HT...	1 KB
NJT833X_change_DHCPClient_disable.bat	9/4/2024 11:35 AM	Windows Batch File	2 KB

III. Open “DHCPClient_disable_settings.xml” using a text editor. And change it to the IP address and Subnet mask you want to set and save it.
(Default - IP address: 192.168.0.127; Subnet mask: /24 [255.255.255.0])

DHCPClient_disable_settings.xml - Notepad

File Edit Format View Help

```
<?xml version="1.0" standalone="yes"?>
<!DOCTYPE configrecord [
   <!ELEMENT configrecord (configgroup+)>
   <!ELEMENT configgroup (configitem+)>
   <!ELEMENT configitem (value+)>
   <!ELEMENT value (#PCDATA)>
   <!ATTLIST configrecord version CDATA #IMPLIED>
   <!ATTLIST configgroup name CDATA #IMPLIED>
   <!ATTLIST configgroup instance CDATA #IMPLIED>
   <!ATTLIST configitem name CDATA #IMPLIED>
   <!ATTLIST configitem instance CDATA #IMPLIED>
   <!ATTLIST value name CDATA #IMPLIED>
]>
<configrecord version = "0.1.0.1">
   <configgroup name = "Interface" instance = "eth0">
      <configitem name = "DHCP Client">
         <value>Disabled</value>
      </configitem>
      <configitem name = "IP Address">
         <value>192.168.0.127/24</value>
      </configitem>
   </configgroup>
</configrecord>
```

IP address and Subnet mask

IV. Double Click “NJT833X_change_DHCPClient_disable.bat.

＊Above Specifications are subject to change without notice.

V. If the change is successful, you will see a blue screen;
if not (failed), you will see a red screen and check your connection and run the batch file again.

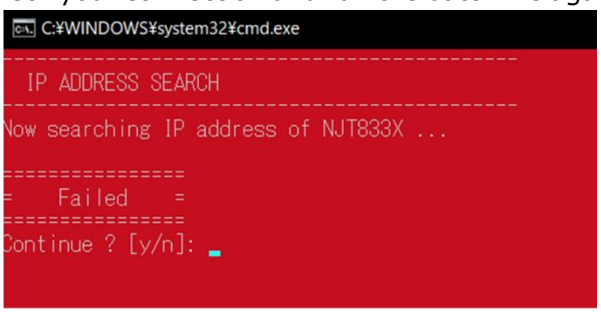

VI. After the changes are successful, enter “n” and click Enter to exit the batch file.

VII. Turn off and on BUC power for the changes to take effect.
*Settings will be activated after the BUC power is rebooted

＊Above Specifications are subject to change without notice.